The Innovation Company
LTG Aktiengesellschaft

Technical Documentation

Accessories for LTG Air-water systems

LTG Aktiengesellschaft
Grenzstraße 7, 70435 Stuttgart, Germany
Tel. +49 711 8201-0, Fax +49 711 8201-720
info@LTG-AG.com
www.LTG-AG.com

LTG Incorporated
105 Corporate Drive, Suite E
Spartanburg S.C. 29303, USA
Tel. +1 864 599-6340, Fax +1 864 599-6344
info@LTG-INC.net
www.LTG-INC.net

LTG S.r.l. con socio unico
Via Matilde Serao 5, 20144 Milano (MI), Italia
Tel. +39 02 9550535, Fax +39 02 9550828
info@LTG-SRL.it
www.LTG-SRL.com

Accessories air-water systems-eng-TP (08/12) 416-83

Accessories for LTG Air-water systems

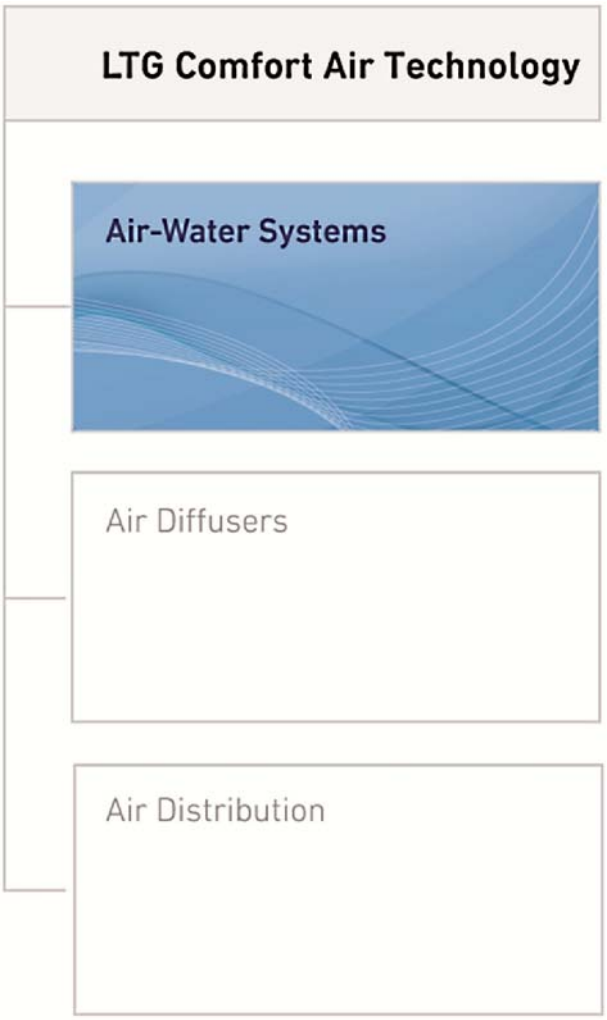

Content

Notes

Dimensions stated in this brochure are in mm.

Dimensions stated in this brochure are subject to General Tolerances according to DIN ISO 2768-vL.
For the outlet grille special tolerances stated in the drawing apply.

Straightness and twist tolerances for extruded aluminium profiles according to DIN EN 12020-2.

The surface finish is designed to meet the requirements for applications in buildings - room climate according to DIN 1946 part 2. Other requirements on request.

The actual tender documentations are at the end of this document.
They are available in word format at your local dealership or at www.LTG-AG.com.

Accessories for LTG Air-water systems

Product overview

	Available for	Page
Water connections, flexible hoses		
for LTG heat exchanger - LTG olive - 1/2" thread - Bare pipe	any induction and fan coil unit	4 - 11
Suspension / installation		
Wall mounting, suspension at rear		12, 14
- version I	HFG, VFC	
- version II	HFH, HFL	
Wall mounting, lateral suspension		13, 14
- version I	HFG	
- version II	HFH, HFL	
Using floor stands - version I	HFG, HFL	15
- version II	HFH, VFC	
Ceiling installation	HFG, HFH, HFL	16
Air outlet grilles		
- Air outlet grille type LDC	any induction and fan coil unit	17
- Outlet frame type LDI		18
Throttle damper for primary air type KLX **Throttle damper type KLI**	any induction and fan coil unit	19, 20
Discharge duct		
- straight	HFG, HFL, HFH	21
- angled	HFG, HFL, HFH	21
- with spreading vanes for improved indoor air flow	HFG, HFL, HFH	21
Regulation		
Overview		22
Room temperature regulators for induction units		
- Type HKR 20	HFG without Bypass, HFS, HDC	23
- Type HKR 40	HFG with Bypass, HFL, HFH	24
- Type RDG 100		27
- Type RDG 100T		28
- Type RDG 140		29
- Type RDG 160EC		30
Room temperature regulators for fan coil units		
- Type VKR 25		25
- Type RCC 10/30		26
- Type RDG 100	all valve-controlled fan coil units	27
- Type RDG 100T		28
- Type RDG 140		29
- Type RDG 160 EC		30
Valves and valve actuators		
- Radiator valve type VDN 115 (straight-way valve)		31
- Radiator valve type VEN 115 (angle valve)		31
- Radiator valve type VUN 215 (reverse angle valve)	all valve-controlled	31
- Thermoelectric valve actuator 2-point	induction and fan coil units	32
- Thermoelectronic valve actuator 0 ... 10 V	for perimeter installation	32
- Electromotoric valve 3-point		32
- Electro-motor-actuated valve actuator 0...10 V		32
- Thermomotoric valve actuator 0...10 V		32
Panelling	all induction and fan coil units for perimeter installation	33 - 36

Accessories for LTG Air-water systems
Water connections, flexible hoses

Water connections

LTG air conditioning systems are equipped with heat exchangers for heating and cooling.

These heat exchangers are certified for a pressure of up to 10 bar (test pressure 16 bar).

For connection of the heat exchangers to the water supply system, both flexible hoses (see page 6) and copper pipes may be used. Various versions are shown on pages 4/5. Space for pipe expansion must be allowed during installation.

When tightening the fittings, avoid damaging the heat exchanger pipes through bending or twisting. Pipe fittings must always be flush.

In order to adjust the water volume specified in the selection data, a regulating device or restricting olive will be required.

If identical units with exactly the same water volume and pressure losses are used, an individual regulating device for each unit is unnecessary. In this case, one regulating device for the entire line may be sufficient. Otherwise, a regulating device will be required for each heat exchanger.

If removal of a heat exchanger without draining the entire system is a requirement, two or four isolation valves will have to be provided for each unit. Standard isolation valves may be used.

The unit fitting will only be provided with an integrated vent if requested. The water speed inside the heat exchanger is usually sufficient to carry along air bubbles and one ventilation device per line is therefore appropriate. In a case of emergency, the line may be ventilated by slightly loosening the standard fitting of the unit.

Included in the unit price and also in general provided with the unit - (unless special fittings such as transitions, straight-way or angle valves or hose connections are ordered) is a complete compression fitting for unit-side water connection, appropriate to take copper pipes with a 12 mm outer diameter, wall thickness of 0.7 - 1.0 mm, suitable for connecting hoses.

Exception: Water connections of units VFC, QVC, VKD, QHG-4, HFG-4 and LVC are provided with a soldered-on sleeve with a fixed internal thread.

Due to possible condensation, the connections to the heat exchanger for cooling should be insulated, e.g. using Armaflex insulation.

The water supply side must be specified in your order. For some units, connections may be changed on-site, during installation, by loosening four screws.

Flexible hoses

Type	EPDM	Oxygen diffusion tight
		Free of halogens, plasticisers and heavy metals. Tested acc. to DIN 4726
Braiding	Stainless steel wire acc. to AISI 304	
Ferrule	Stainless steel acc. to AISI 304	
Temperature range	-20 ... +100 °C	up to +80 °C
Max. operating pressure	15 bar	10 bar
Internal ∅	12 mm	12 mm

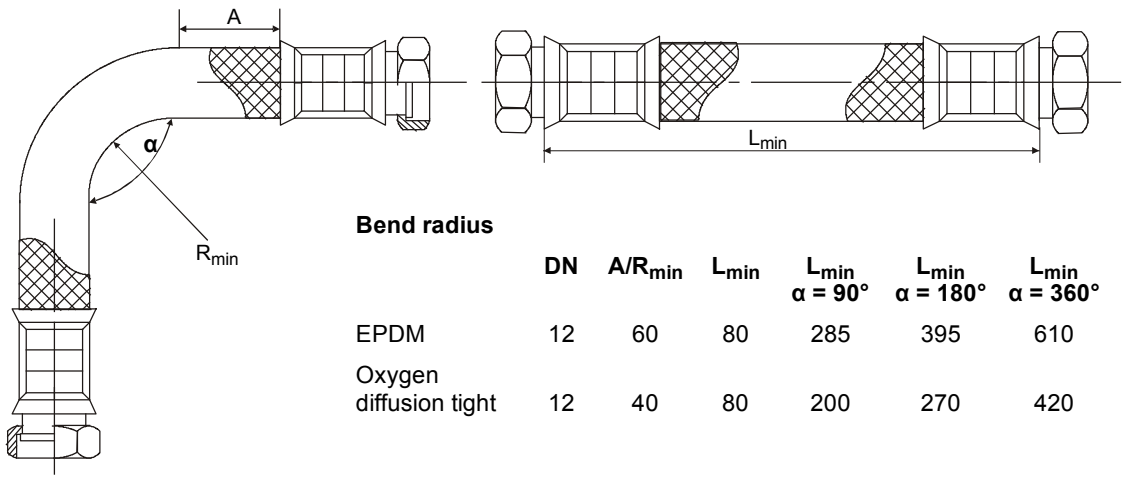

Bend radius

	DN	A/R_{min}	L_{min}	L_{min} α = 90°	L_{min} α = 180°	L_{min} α = 360°
EPDM	12	60	80	285	395	610
Oxygen diffusion tight	12	40	80	200	270	420

Accessories for LTG Air-water systems
Water connections LTG olive

Hose versions for water connection on site

If required, with insulated hose, 10 mm Armaflex® (standard)

ÜFD
union nut, flat seal
R: ½ “ or ¾ “

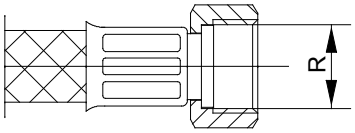

ÜKD
union nut, tapered seal
R: ½ “ or ¾ “

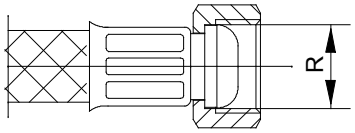

AGK
union nut, tapered
R: ⅜ “ or ½ “

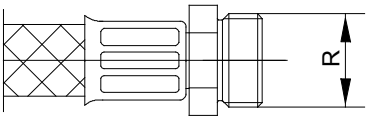

Hose versions for direct connection to bare pipe heat exchangers

SK + Eh
quick coupling 12 mm
connection to heat exchanger
with small air-drain valve ⅛ ”

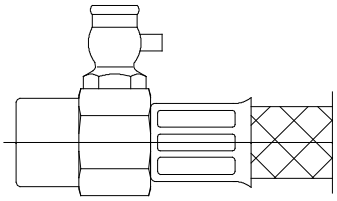

SK
quick coupling 12 mm
connection to heat exchanger

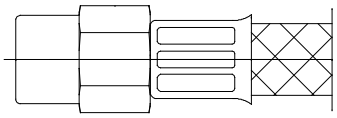

if required,
hose with insulation

Spare parts

If required, with insulated hose, 10 mm Armaflex® (standard)

AGSKEB + Eh
special olive with external thread
special fitting for LTG units
with small air-drain valve ⅛ ”

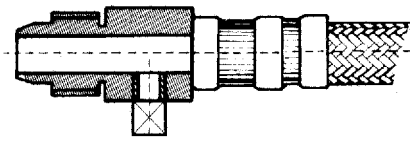

AGSK
special olive with external thread
special fitting for LTG units

VSXG 5/2 EH transition with vent ½“, **Id. Nr.:** 2421.2

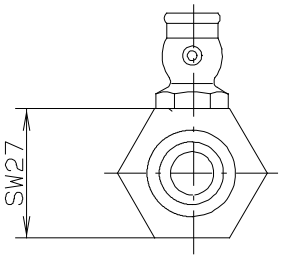

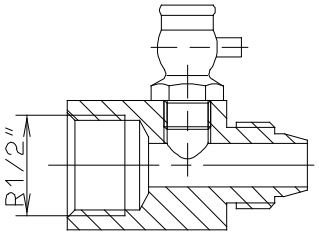

Accessories for LTG Air-water systems
Water connections with quick coupling

Transition

Direct transition from bare pipe connection to thread (1/2” interior)

VSXG 9/2

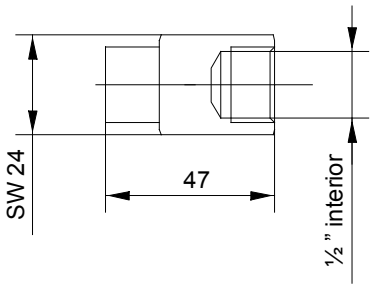

VSXG 10/2 EH (with ventilation)

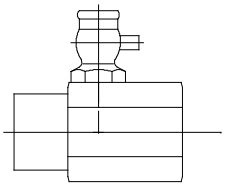

wrench width 24
on request with small
air-drain valve ⅛ ”

Special tool for quick coupling removal

To remove the quick coupling a special tool is required. Each delivery of hoses/transitions is accompanied by an adequate number of these tools.
The tool is simply positioned on the 12 mm pipe and the quick coupling to easily remove the latter.

Examples for water connections using angle or straight-way valves and flexible hoses

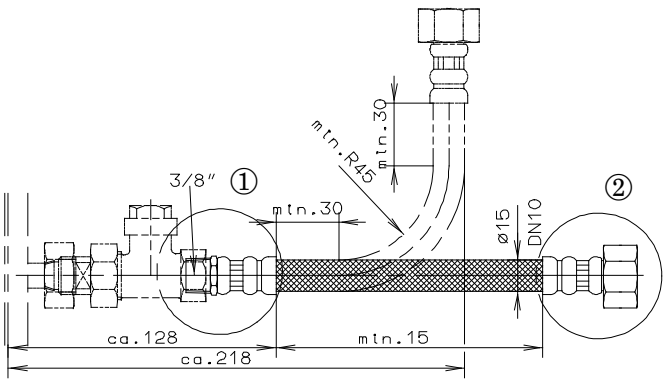

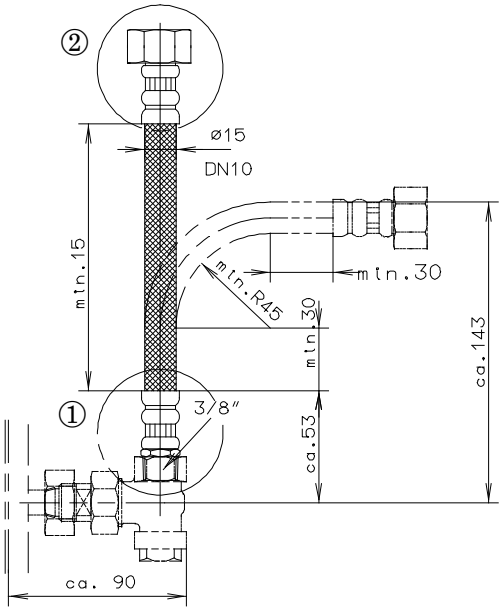

Please observe the hose manufacturer's instructions !
Hose without insulation. For insulated hoses, dimensions will change accordingly.

① Hose for connection to angle or straight-way valve
Connection type: AGK, external thread, tapered ⅜ ”

② Special connections (see above)
Thread diameter to customer requirement (or standard ⅜ ”)

Accessories for LTG Air-water systems
Water connections with quick coupling

Examples for water connections using flexible hoses

Quick coupling connection to heat exchanger

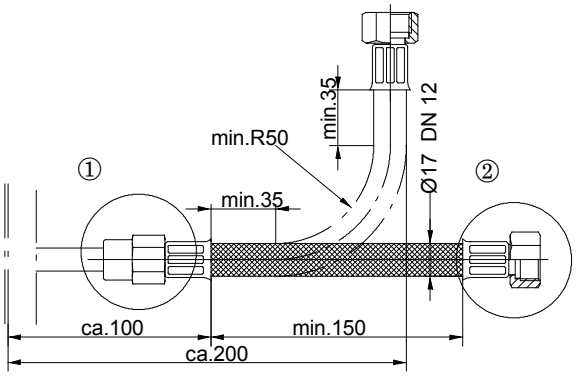

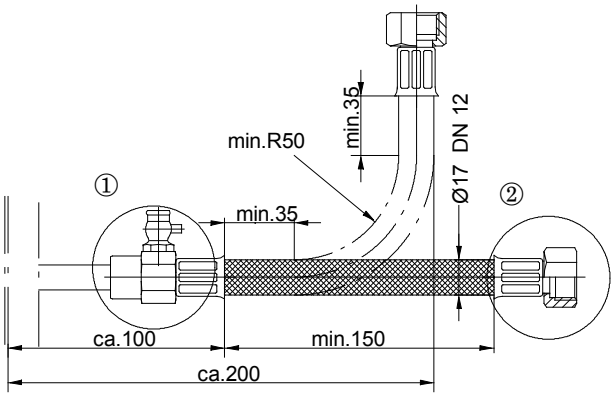

Please observe the hose manufacturer's instructions !
Hose without insulation. For insulated hoses, dimensions will change accordingly.
(10 mm Armaflex insulation)

① Hose for connection to LTG bare pipe heat exchangers
Connection types (see page 5): SK
SK + Eh

② Different hose connections (see page 5)
Thread diameter acc. to customer requirements or standard ½ ”

Example for water connections using transitions, straight-way valves and flexible hose

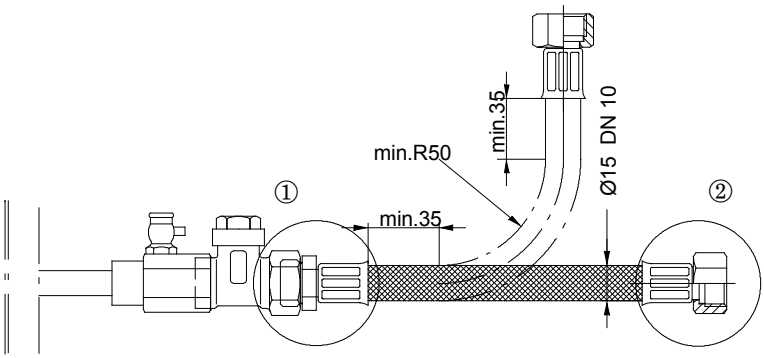

Please observe the hose manufacturer's instructions !
Hose without insulation. For insulated hoses, dimensions will change accordingly.

① Hose for connection to angle or straight-way valve
Connection type: AGK, external thread, tapered ½ ”

② Different hose connections (see above)
Thread diameter acc. to customer requirements or standard ½ ”

Accessories for LTG Air-water systems
Water connections with quick coupling

Example for water connection using valve and flexible hose (straight and 90° variant)

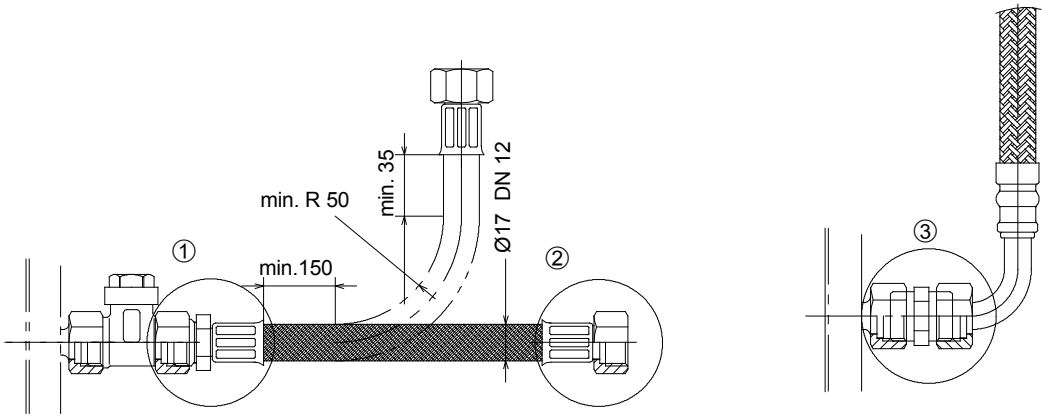

Hose without insulation. For insulated hoses, dimensions will change accordingly.
(10 mm Armaflex insulation)

① Hose for connection to angle or straight-way valve,
Connection type AGK, external thread, tapered 1/2”

② Different hose connections, thread diameter acc. to customer requirements or standard 1/2”

③ Connection for direct screwing into the heat exchanger in case of angle connection,
Connection type: double nipple 1/2”-1/2”; UFD hose connection, 1/2” flat seal union nut

Example for water connection for direct screwing into the heat exchanger

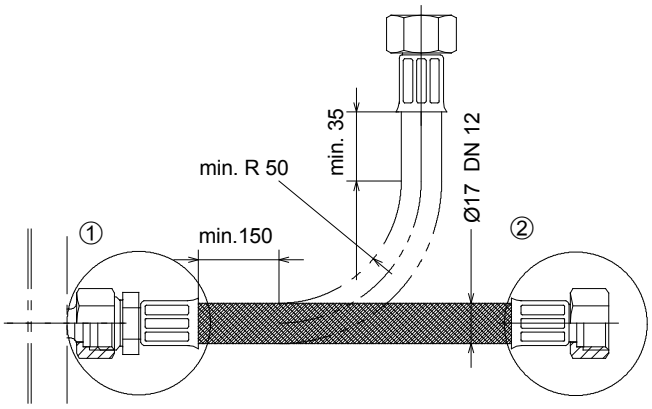

Hose without insulation. For insulated hoses, dimensions will change accordingly.

① Connection for direct screwing into the heat exchanger
Connection type: AGK, external thread, tapered 1/2”

② Different hose connections, thread diameter acc. to customer requirements or standard 1/2”

Accessories for LTG Air-water systems
Instructions for installation of water connections using flexible hoses

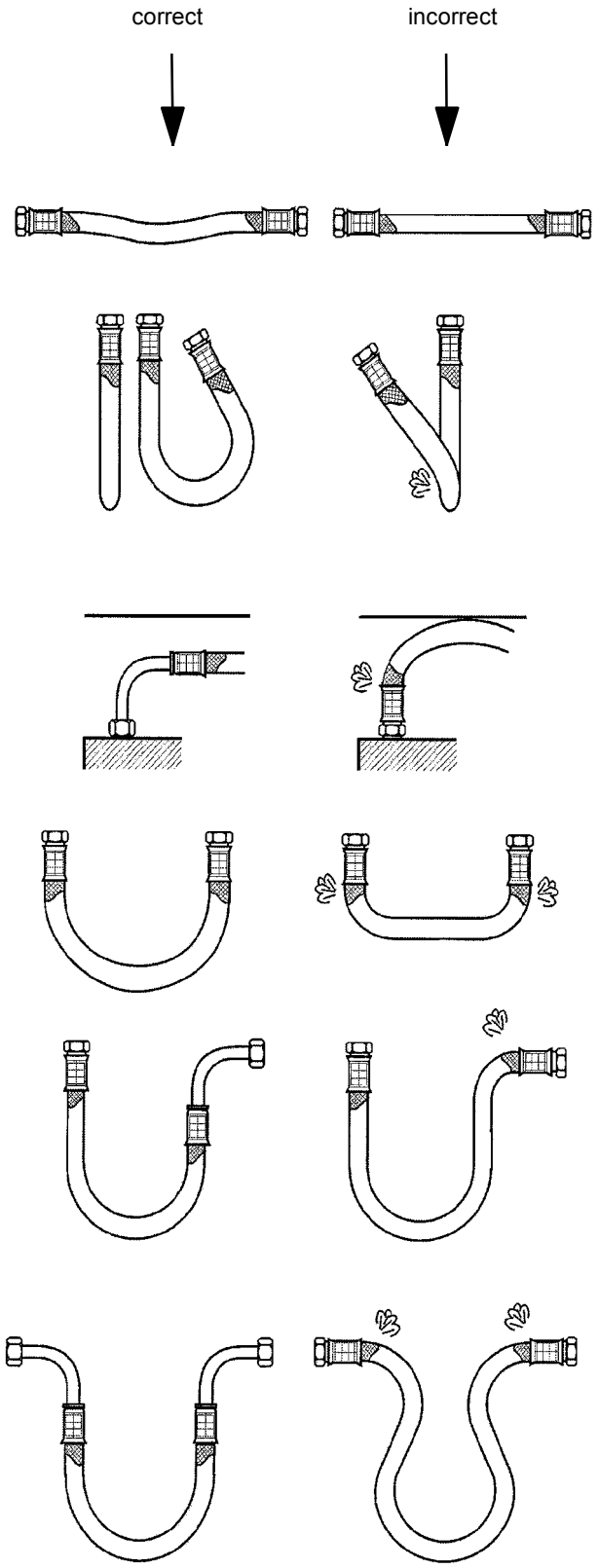

- Pressure and exposition to heat may result in slight elongation of the hose.
  Therefore, newly placed hoses must consider such potential elongation.

- Do not fall below the admissible bending radius R_{min} (chart), neither during transport, nor during installation or when installed.
  If it should turn out impossible to keep the admissible bending radius, choose a different installation type.

- For minimum length see chart below.
  If the hose is being placed by bending it, check whether there is sufficient hose length to allow for an open bow in order to avoid kinking and destruction of the hose at the connecting points.

- Absolutely avoid distorting or kinking the flexible connection.

- Do not subject the hose to any tensile or pressure loads applied from outside, neither during installation nor operation.

- Do not retighten rigid connections (outer thread) after fixing the second connection since this might result in distortion of or damage to the hose.

- In general, tightness of the connection (hose/connector) is the responsibility of the technician performing the installation.

- Any sealing material included in the delivery is to be verified by the technician for its suitability since the hose manufacturer has no information about the material or geometry of the connections.

Accessories for LTG Air-water systems
Instructions for installation of water connections using flexible hoses

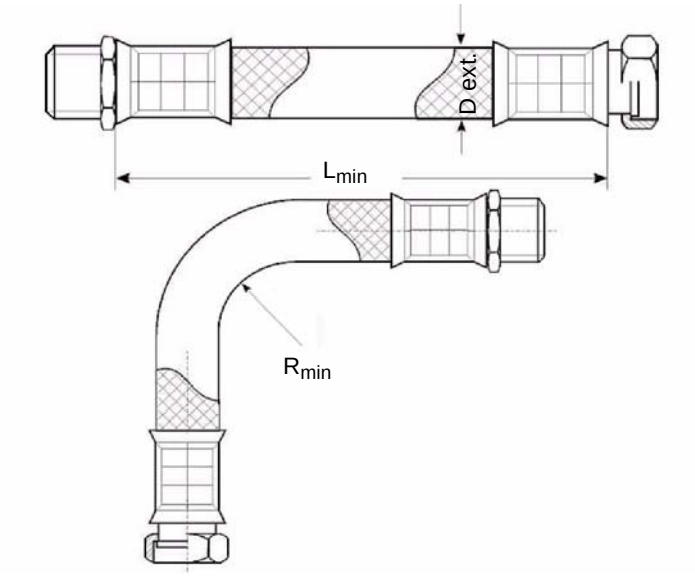

Armoured hose Oxystop up to +70 °C (diffusion inhibiting, marked through weaved-in blue strip)
Armoured hose EPDM up to +93 °C (vapour permeable, not marked)

DN hose	D_A	PN [bar]	R_{min}	L_{min}	L_{min} α = 90°	L_{min} α = 180°	L_{min} α = 360°
06/08	12	15	27	60	140	180	260
10	14	15	40	60	190	250	260
12	18	15	60	80	260	360	550
15	22	12	70	95	300	420	640
19	27	10	80	100	350	480	730
25	34	10	100	125	430	590	900
32	44	10	160	140	650	900	1400
40	54	6	180	160	750	1030	1600
50	64	6	230	210	940	1300	2020

Armoured hose Oxyblock
* at +30 °C / 10 bar at +50 °C (diffusion inhibiting, marked through weaved-in blue strip)

DN hose	D_A	PN [bar]	R_{min}	L_{min}	L_{min} α = 90°	L_{min} α = 180°	L_{min} α = 360°
08	13.5	16 *	110	100	310	490	830
10	16	16 *	130	100	380	580	990
12	17	16 *	150	100	450	680	1150

Accessories for LTG Air-water systems
Instructions for installation of water connections using flexible hoses

Plug-in connection Cuprofit

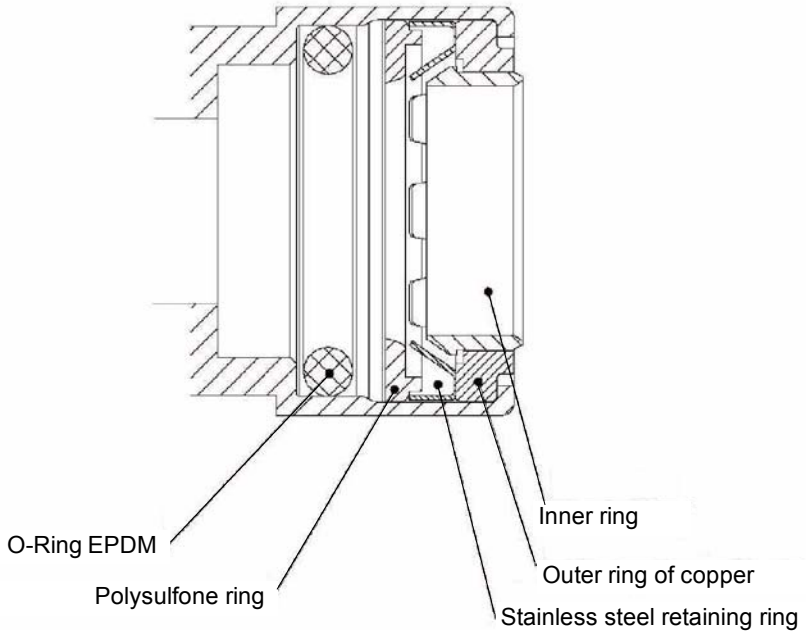

Tube connection of plug-in fitting and bright copper tube according to EN 1057 and RAL 641/1 or suitable brass or red brass socket.

This permanently tight connection is suitable for concealed installation.

Using special tools, this connection may be detached up to three times when not under pressure.
Prior to reconnection, check for undamaged condition of the seal.

Check every installation for tightness when completed.

Due to their specific design, Cuprofit connectors are not suitable for use as grounding conductors for electrical installations and therefore not to be considered in the compensation of potential.

Maximum operating pressure 10 bar / +93 °C.
Test pressure 16 bar / +30 °C.

Accessories for LTG Air-water systems
Suspension, installation

There are, in general, three ways to install or suspend the units:

- wall mounting - rear or lateral
- installation using floor stands
- ceiling installation

*Please consider the following **hints for installation***

- To ensure unit stability and rigidity, use screws of at least the stated property class when fixing the unit. Fixings required for installation are not included.
- Use only the existing holes on the unit for the fixing elements.
- Use only the fixing elements described on the following pages for fixing the unit to ensure sufficient stability. Always observe the installation instructions !
- Do not use the air conditioning units as supporting elements for other components and avoid loading them in any other way.

Wall mounting, rear suspension

For rear suspension, a Z profile is available. It offers the possibility to subsequently **adjust the unit in height by approx. ± 10 mm and laterally, parallel to the wall, by approx. ± 50 mm**. However, the wall clearance cannot be adjusted. Therefore, always state the clearance W between the unit and the wall in your order. For stability reasons, this clearance must not exceed 200 mm when using the standard version, but for greater clearances, a reinforced version is available.

If the unit is not supported from below, use a spacer in addition to the wall bracket for safety reasons (consisting of clamping clips (version I) or clamping brackets (version II) and rubber stops).
The unit housing can be supported in the same way on the front side (see figures - state clearance V).

For wall mounting, screws of at least property class **M8 (8.8)** are to be used to ensure sufficient stability.

Version I (HFG, HFL, VFC)

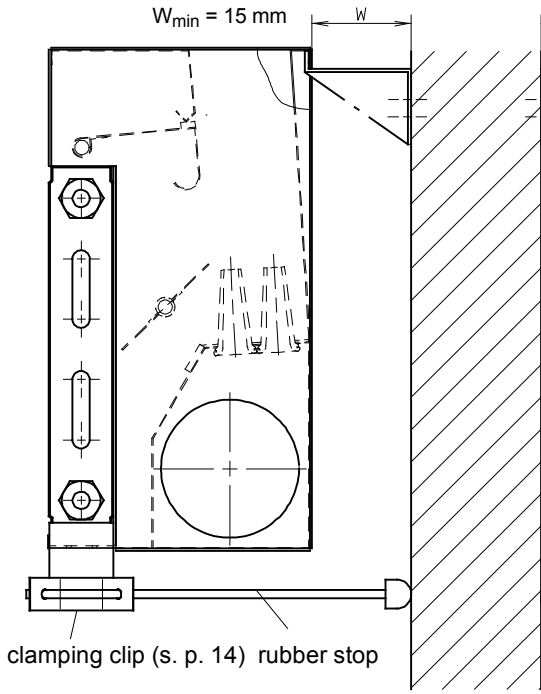

Version II (HFH)

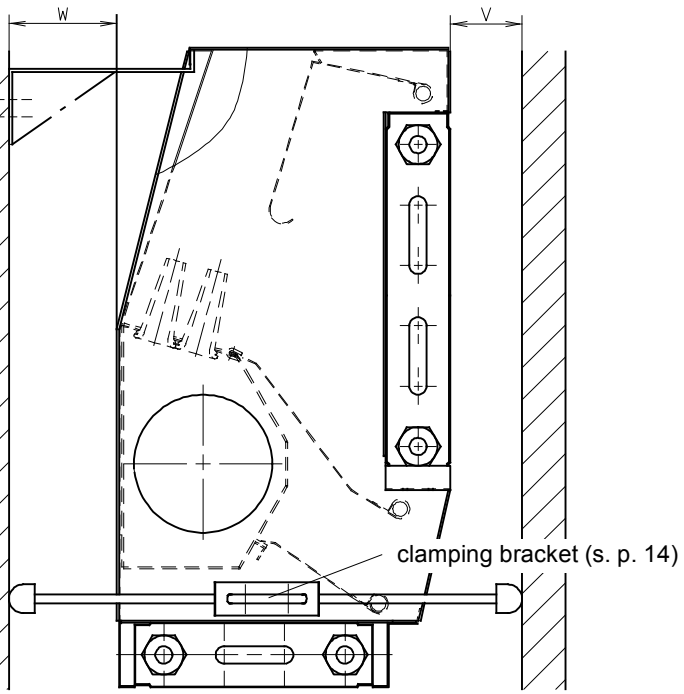

Rear wall bracket

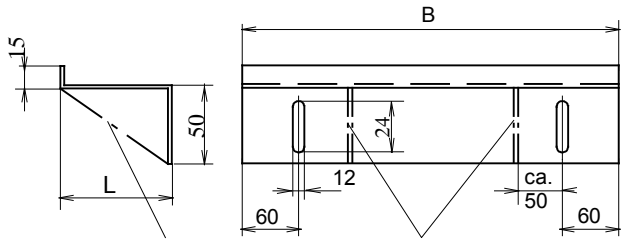

gusset only if L > 205 mm

L = W + 5 mm for version I
L = W + 55 mm for version II

Size	B [mm]
500	375
630	495
800	670
1000	870
1250	1110

Accessories for LTG Air-water systems
Suspension, installation

Wall mounting, lateral suspension

Another possibility to fix the device is the lateral suspension, consisting of a supporting plate and a bracket (this version is not possible for unit type HFG with bypass, VFG with bypass).

The lateral suspension enables you to **adjust the unit in all three axes**:

- ± 25 mm laterally, parallel to the wall, in the slot of the bracket
- ± 25 mm regarding the wall clearance W, in the second slot of the bracket (HFL only ± 7 mm)
- ± 25 mm in height, in the slot of the supporting plate

In general, the supporting plate is not fixed to the unit, but must be ordered together with the lateral bracket. When ordering state the wall clearance W

If the unit is not supported from below, use a spacer in addition to the wall bracket for safety reasons (consisting of clamping clips (version I) or clamping brackets (version II) and rubber stops).

The unit housing can be supported in the same way on the front side (see figures - state clearance V !).

Für die Befestigung an der Wand sind Schrauben mit der For wall mounting, use screws of at least property class **M8 (8.8)** in order to ensure sufficient stability. For fixing the supporting plate, use hammer head screws M8 x 20.

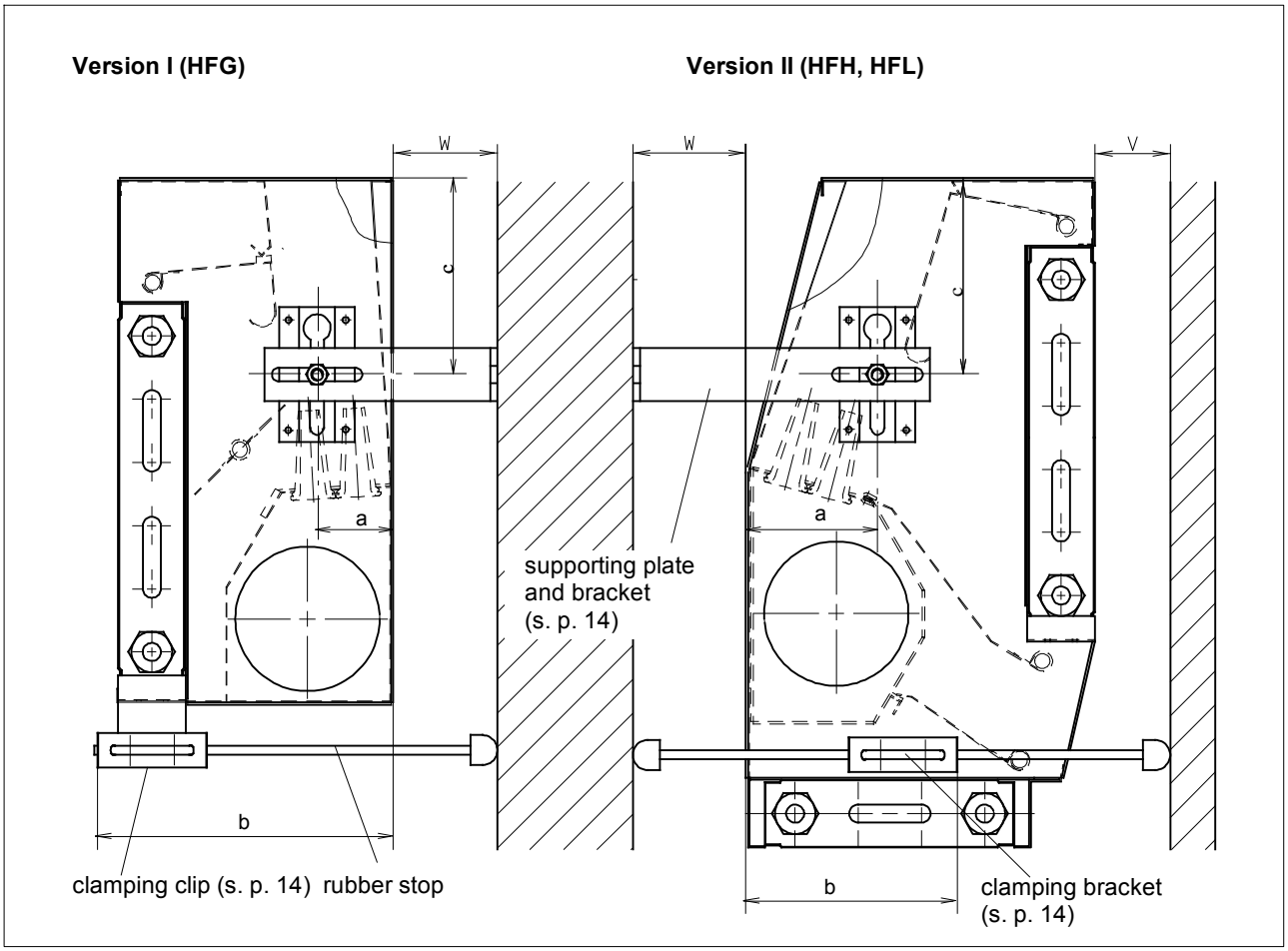

Type	a [mm]	b [mm]	c [mm]
HFG	50	200	60
HFH	90	110	50
HFL	40	90	126

Accessories for LTG Air-water systems
Suspension, installation

Supporting plate and bracket for lateral suspension (see page 13)

Supporting plate (BCH 42/26), mounted to the unit
Id.-No. 48296.9

appropriate for hammer head screw M8 x 20
Id.-No. 20599.9 for profile 28/15
(washer A8,4 Id.-No. 21016.2)

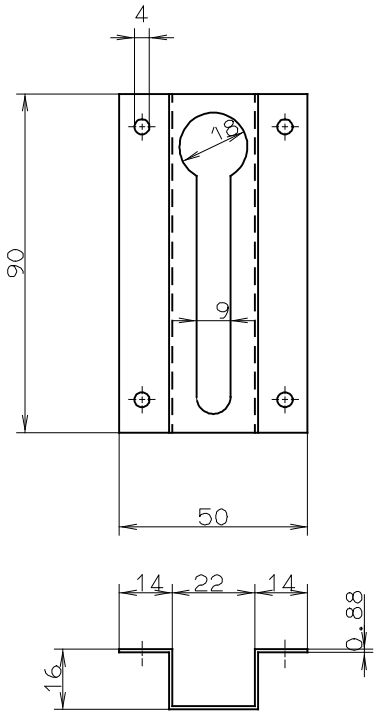

Bracket (HAX 156)

L - length of bracket:
L = W + a + 35
L = W + a + 17 (at HFL)
L_{min} = 70 mm

L_1 - clearance wall to center of slot
L_1 = W + a

W = clearance wall
dimension a see table page 13

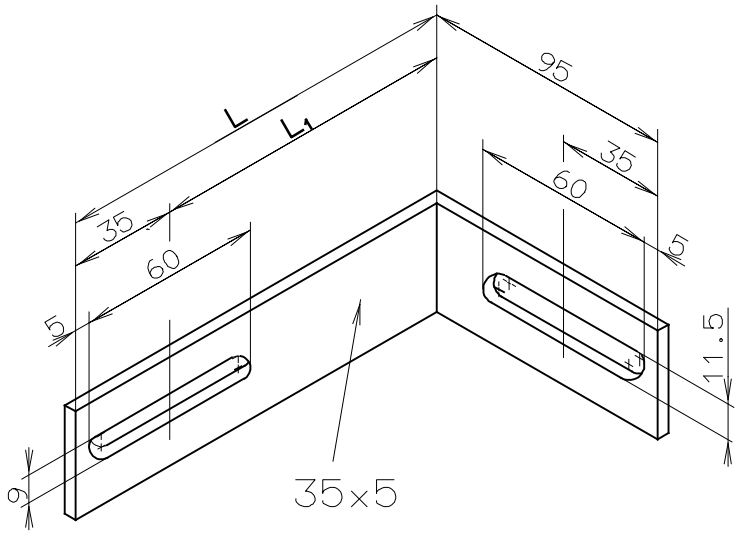

Clamping bracket and clamping clip for rear and lateral suspension (see page 12/13)

Clamping bracket
Id.-No. 35093.4
(HFH, HFL)

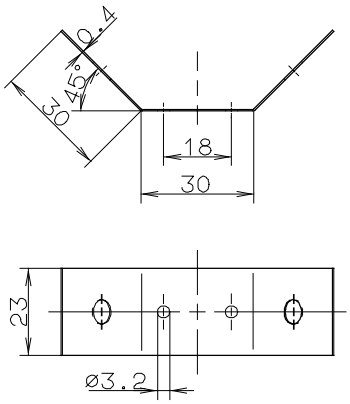

The clamping brackets for HFH, HFL will be delivered riveted to the unit if ordered as accessories.

Clamoing clip
Id.-No. 1014811

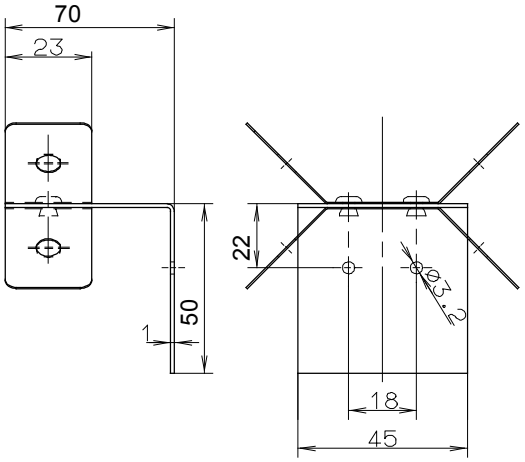

The clamping piece for HFG will be delivered separately and must be inserted between the condensate receiver and the housing.

Accessories for LTG Air-water systems
Suspension, installation

Installation using floor stands

For an installation independent of the wall, galvanized floor stands with a plastic plug are available (2 floor stands required for each unit).

The floor stand height L depends on the unit type and the installation conditions. For type HFH and HFW, dimension 'H' should be at least 80 to 100 mm for easy access when cleaning the air heater. For all other models, 'H' > 20 mm may be sufficient. Please always state the unit type and dimension 'H' when ordering.

The unit is adjustable in height, upwards by approx. 5 mm, and downwards to 'H' = 20 (80) mm.
However, it should be considered that the floor stand may exceed the unit height.

Location screws (included in the delivery) are fixed to the rails of the floor stands and the unit is inserted in this fixing device.

When fixing the unit to the floor, use screws of at least property class **M8 (8.8)**. These special screws are not included in the delivery.

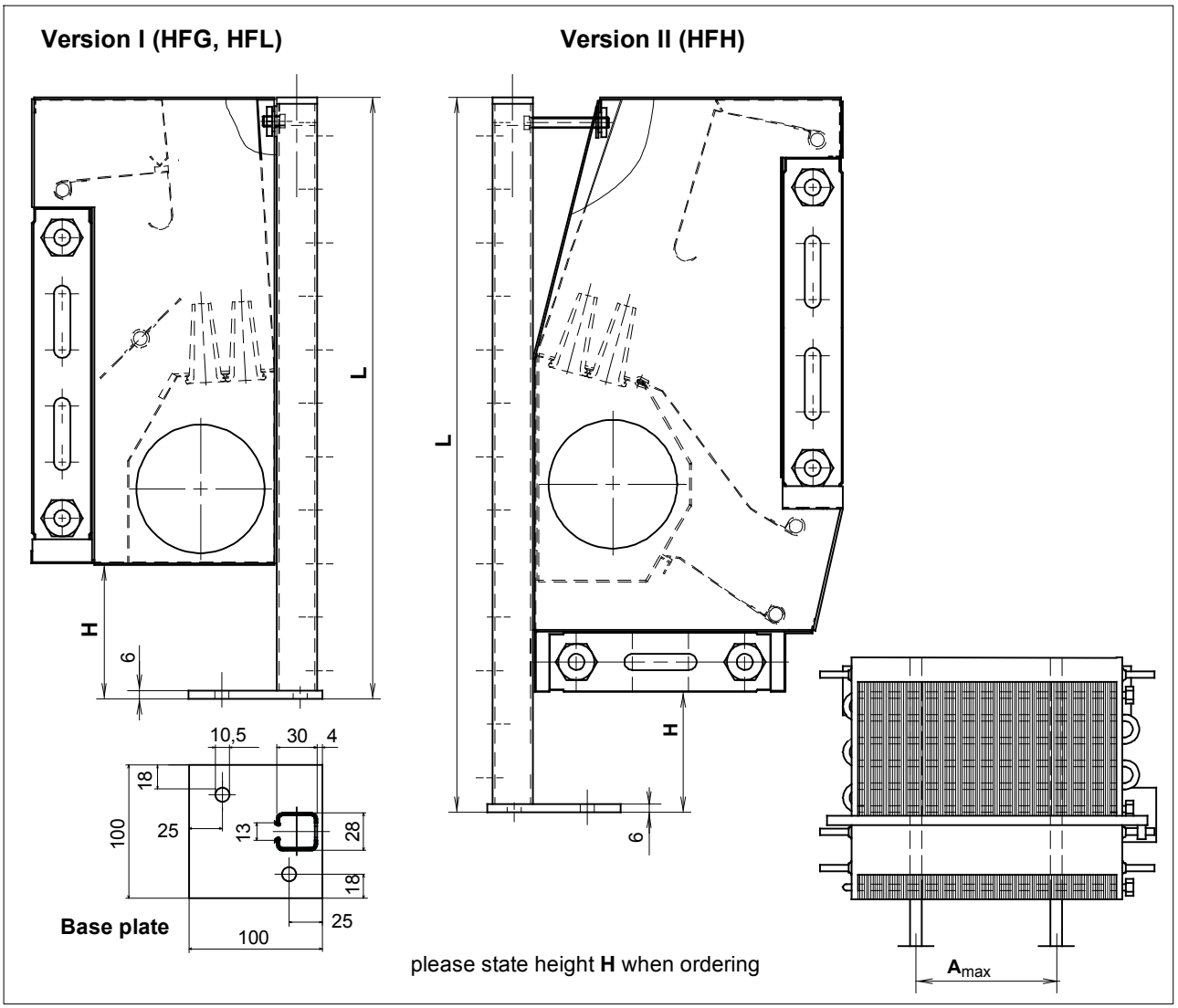

Type	Height of stand L [mm]
HFG	**H** + 350
HFH	**H** + 445
HFL	**H** + 498

Size	Distance A max. [mm]
500	430
630	570
800	730
1000	930
1250	1250

Accessories for LTG Air-water systems
Suspension, installation

Ceiling installation

Units of type HFG, HFH, and HFL may also be installed horizontally to the ceiling.

This special type of installation must always be clearly stated in your order and is subject to an extra cost. The units require a larger condensate receiver and appropriate supporting plates. Furthermore, for units HFH the damper linkage will have to be amended.
For suspension, use threaded drop rods only! (Not included in the delivery !)

For horizontal installation, the cooler must be angled by 10° in order to allow the condensate drainage and to avoid condensate between the blades of the heat exchanger. This special arrangement will only be required if a constant condensate formation is to be expected, i.e. if the temperature of the cold water supply will constantly remain more than 2 K below the dew point of the ambient air.

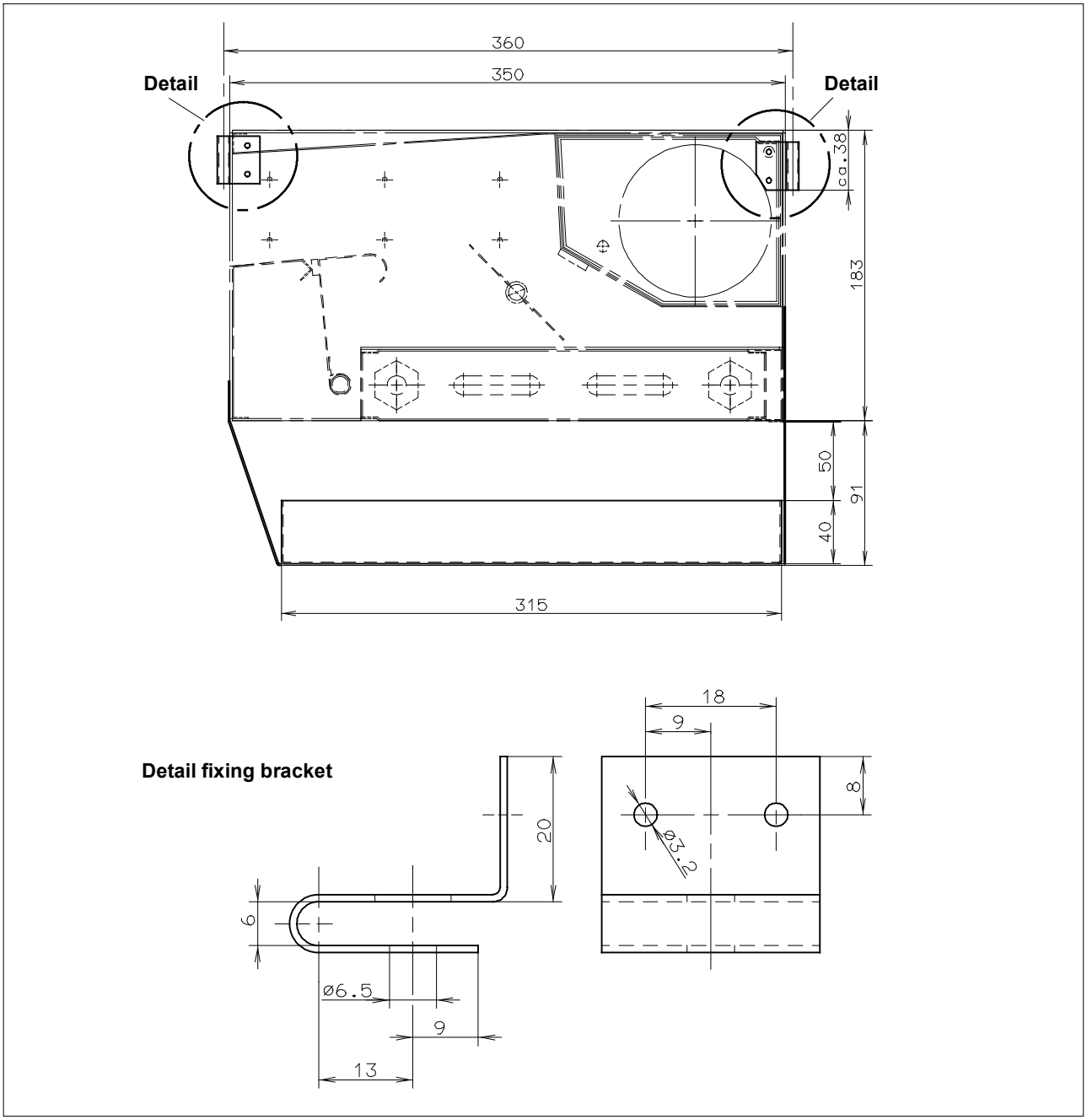

Accessories for LTG Air-water systems
Air outlet grille type LDC

For all LTG air conditioning systems, aluminum grilles type LDC are available as accessories in the below stated dimensions.

Grille type LDC consists of continuous aluminum profiles with cross struts of aluminum tube, diffuser grille with an 85 % free cross section, rounded lower edges, and an optimized blade deflection.

Finish: anodized in natural color or
powder coated similar to RAL
max. length 2000 mm
max. width 350 mm

Dimensions see below,
Special versions, lengths or widths on request.

Dimensions

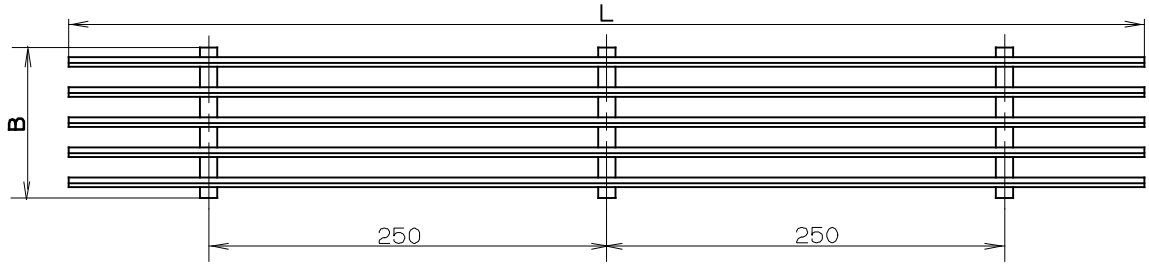

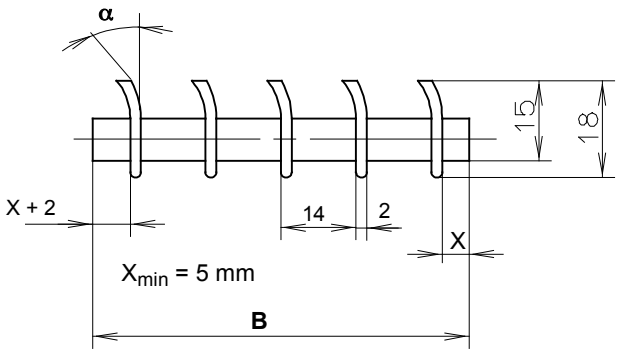

Type	Air jet deflection α
LDC 15	15 °
LDC 20	20 °
LDC 25	25 °

Number of blades Z	Grille width B [mm]
4	56
5	70
6	84
7	98
8	112
8 + n	112 + (n x 14)

Installation examples

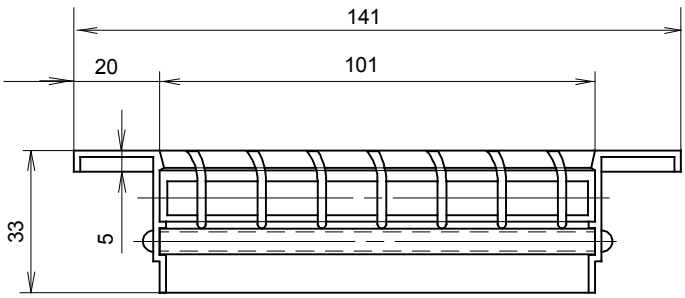

left:
LDC-grille (width 70 mm)
mounted in a sill

below:
LDC-grille (width 98 mm)
in LDI-frame
(see page 18)

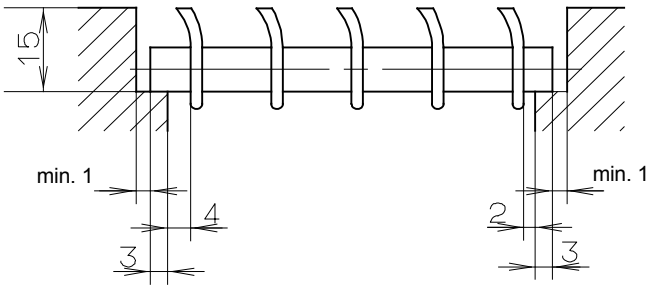

Accessories for LTG Air-water systems
Outlet frame type LDI

Dimensions

For all LTG A/C units, aluminum frames in the following dimensions may be supplied as special accessories to insert air outlet grille type LDC.

For LTG air outlet grilles of type LDC, frame type LDI is available in five standard lengths and in standard width. Special dimensions on request.

The air outlet frame LDI is designed for horizontal use only. Dimension A can be specified to requirements.

Finish of standard version:
aluminium, anodized in natural color
or powder coated to RAL

Outlet frame	Unit size	Dim. A [mm]
LDI 1	500	701
LDI 2	630	901
LDI 3	800	1001
LDI 4	1000	1201
LDI 5	1250	1501

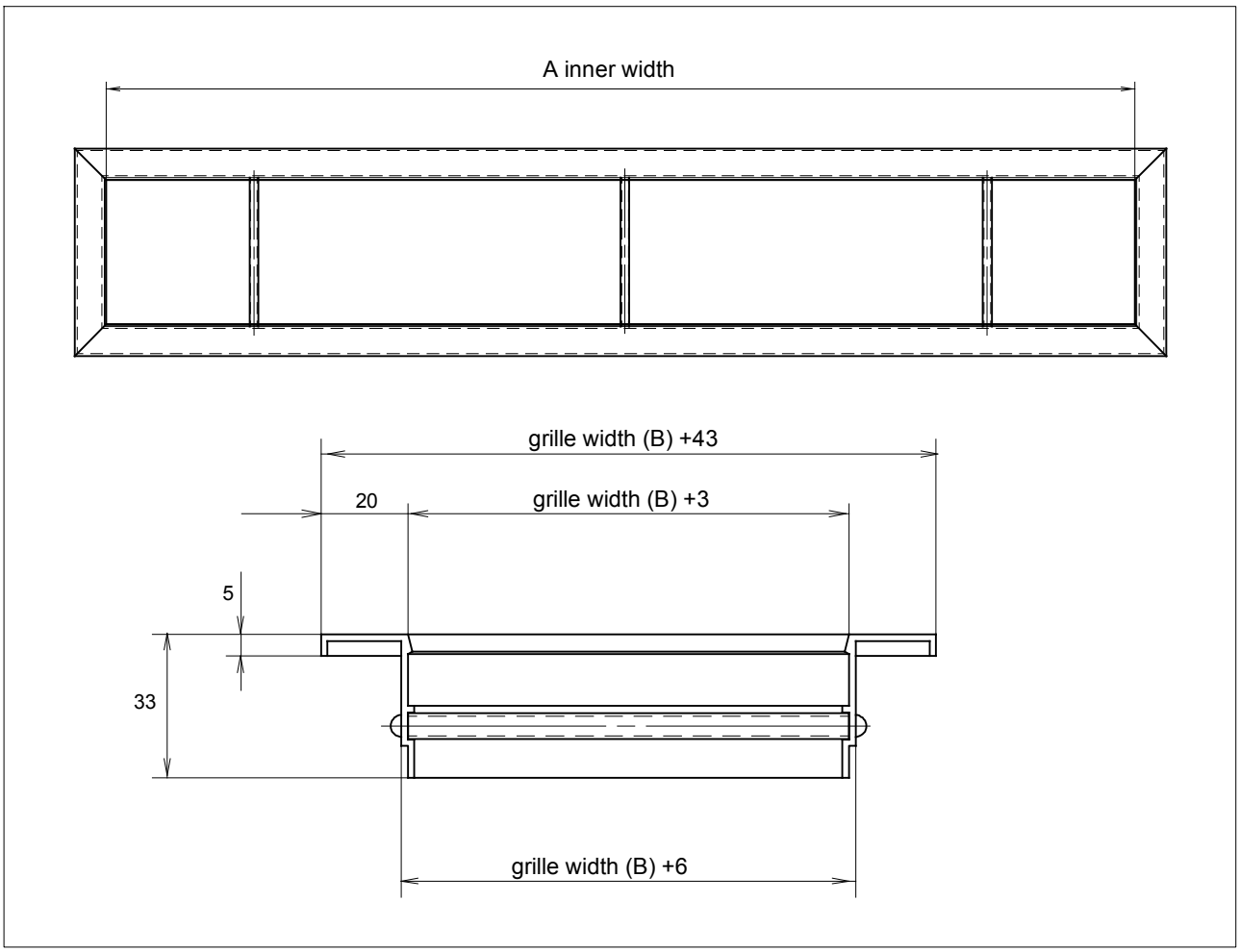

Accessories for LTG Air-water systems
Throttling dampers type KLX and KLI, for primary air

If required, a throttling damper for adjusting the primary air volume may be provided at the inlet socket of the unit (type KLX 100/1, delivered in a separate bag for subsequent installation) or may be factory-installed in the socket (type KLI). Please specify in your order. However, this device for adjusting the air volume should only be used when other means have failed to result in pressure compensation, (balancing should be as far from outlet as possible).

The dimensions of the throttling damper are given below. The free area is 10.7 %.

The diagram on page 20 shows the throttling damper resistance and the sound level area. The noise perceivable in the room may be determined by adding the noise of the air conditioning unit and the noise of the damper, using the graph for level totalling.

Dimensions type KLX for subsquent duct installation

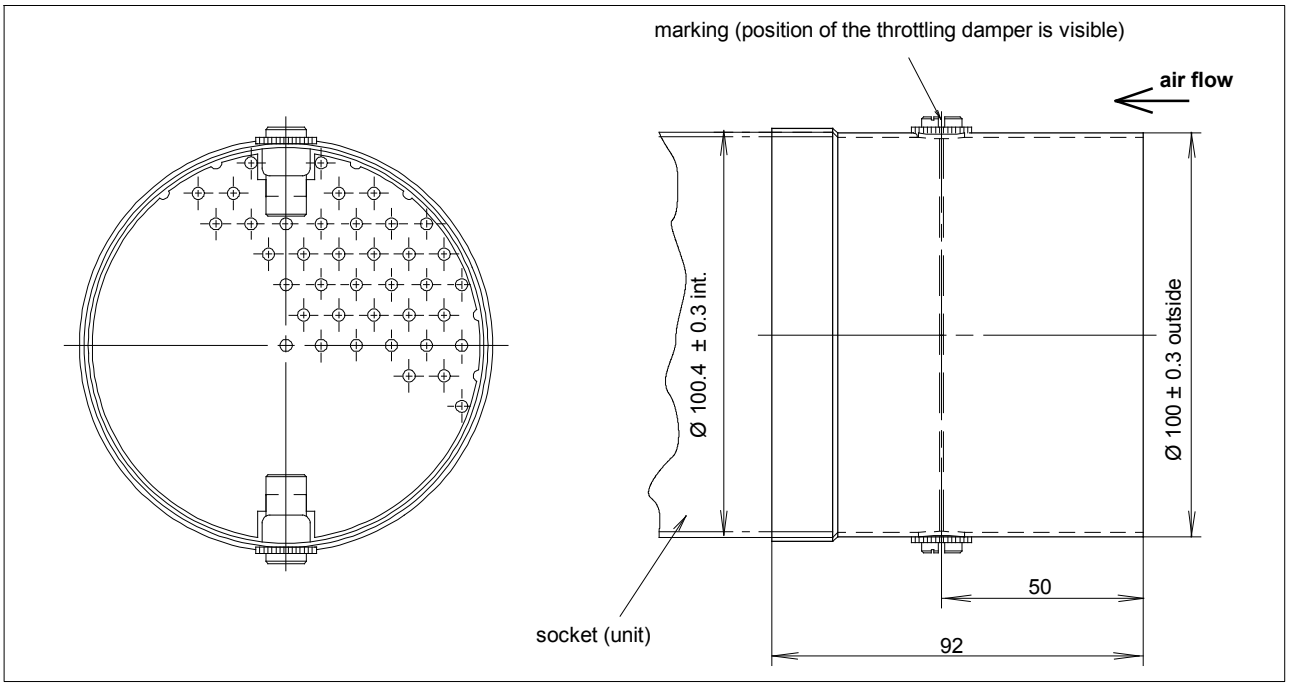

Dimensions type KLI integrated in the socket

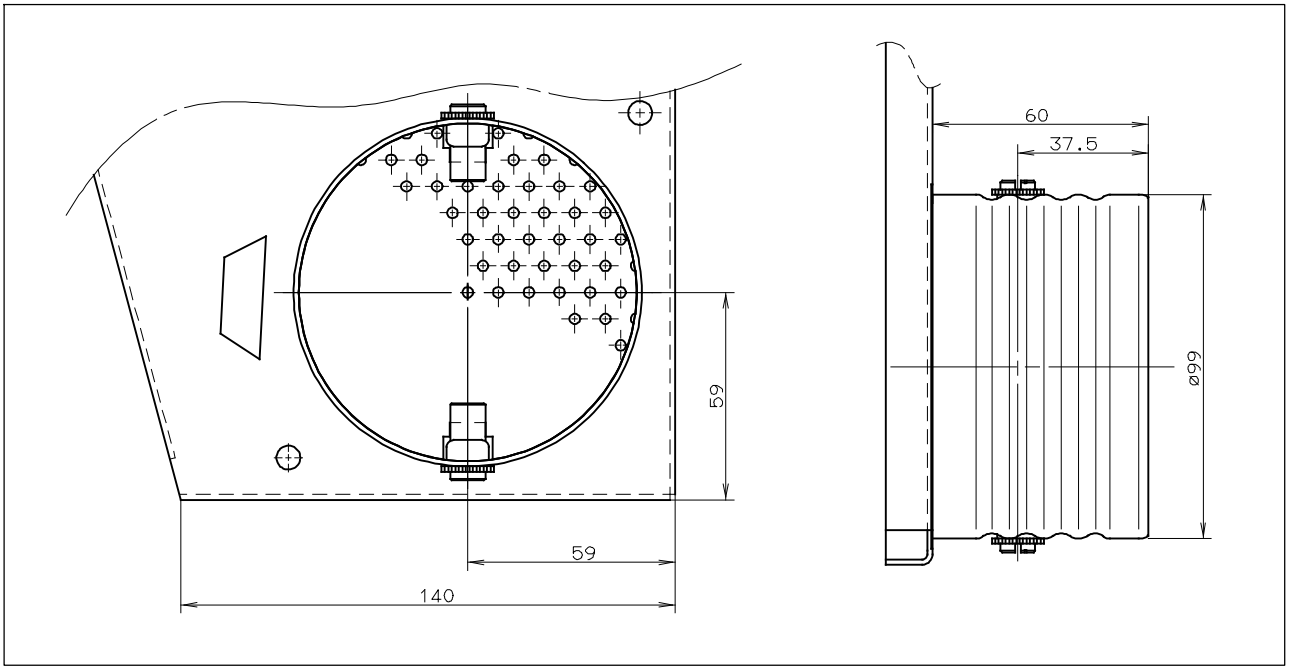

Accessories for LTG Air-water systems
Throttling dampers types KLX and KLI, for primary air

Generated sound level of damper at room absorption 18 m² Sabine

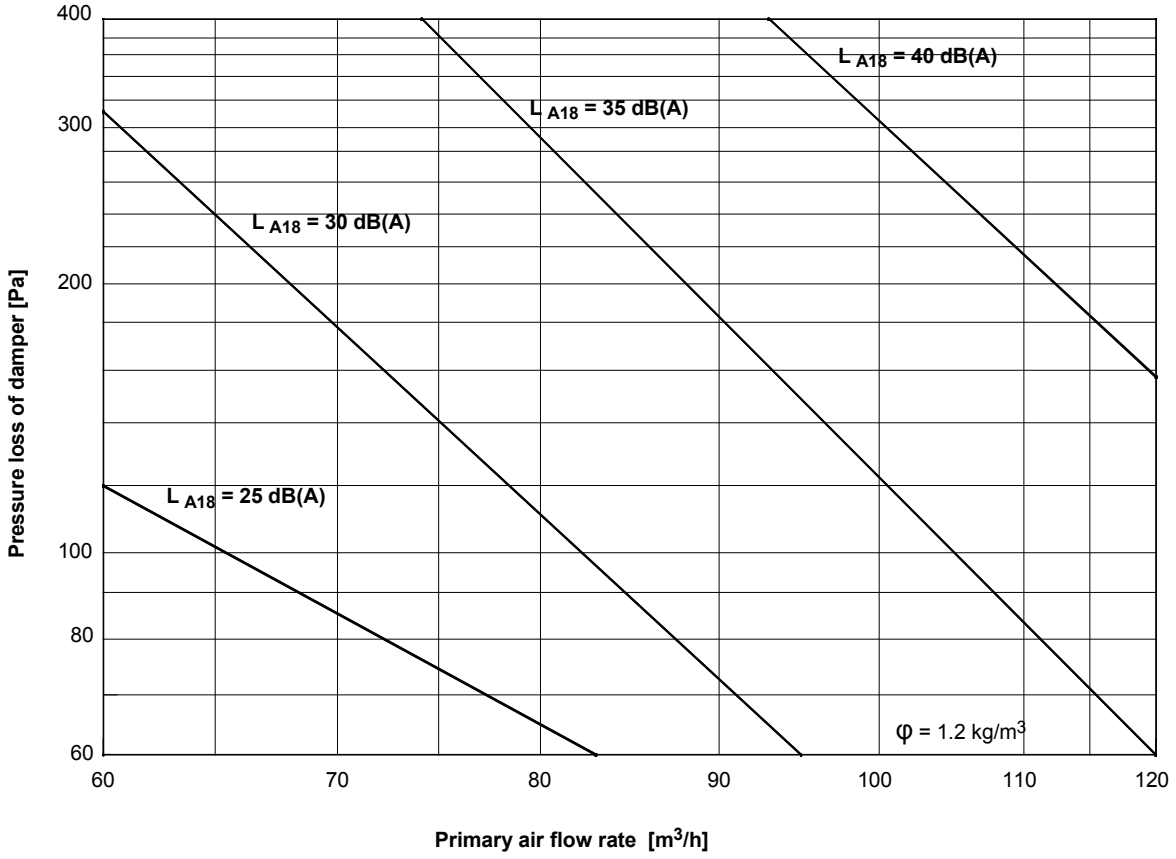

Level totalling

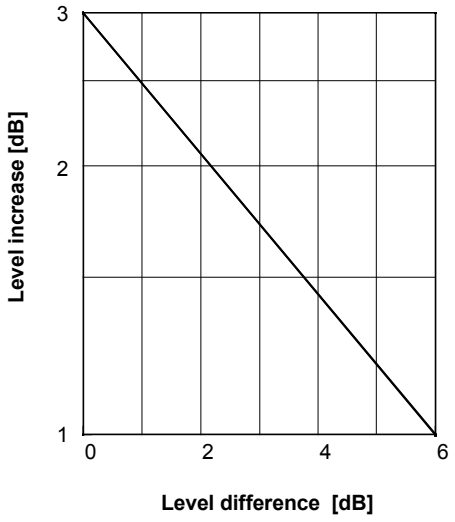

The total sound level of the damper and of the air conditioning unit may be added using this graph.

Accessories for LTG Air-water systems
Air discharge ducts

All LTG air conditioning units are available with or without air discharge duct.

A straight socket is available as part of the series equipment in a standard height of 70 or 110 mm. On request, other socket heights are also available.

Also on request, air discharge ducts angled by 15° towards the front or rear are available (rear = towards the wall).

Heights and angles other than the ones stated should be referred to our technical department.

On request, spreading vanes for improved room airflow are available for any air discharge duct.

Sockets of a height > 100 mm or special sockets are supplied detached and are <u>not</u> installed.

Dimensions air discharge duct, straight

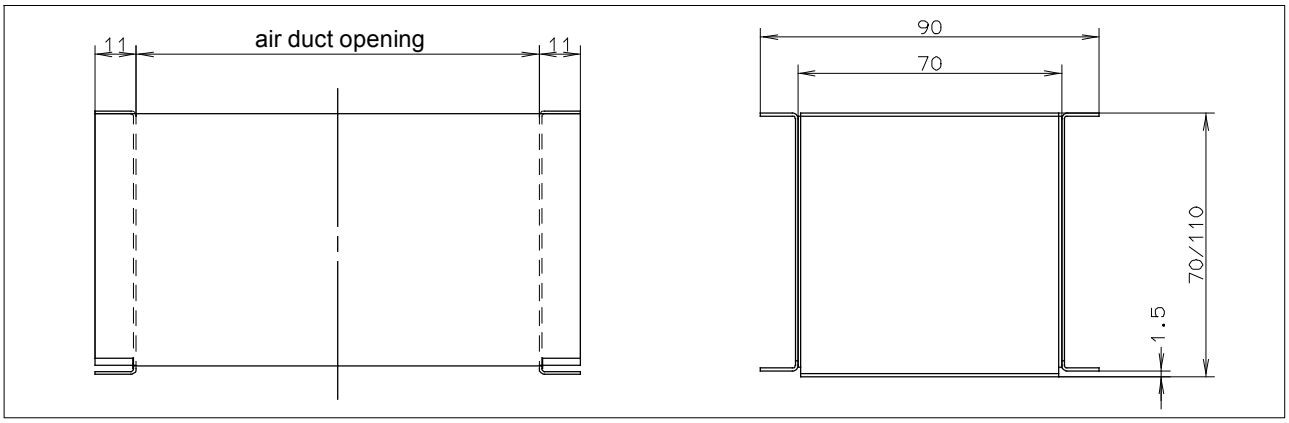

Dimensions air discharge duct, inclined 15°

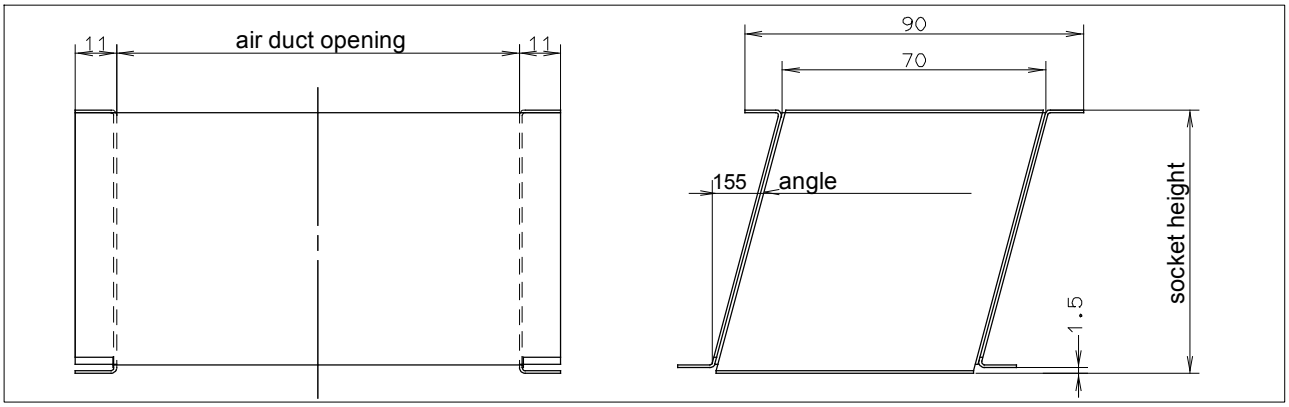

Dimensions air discharge duct with spreading vanes for improved room air flow

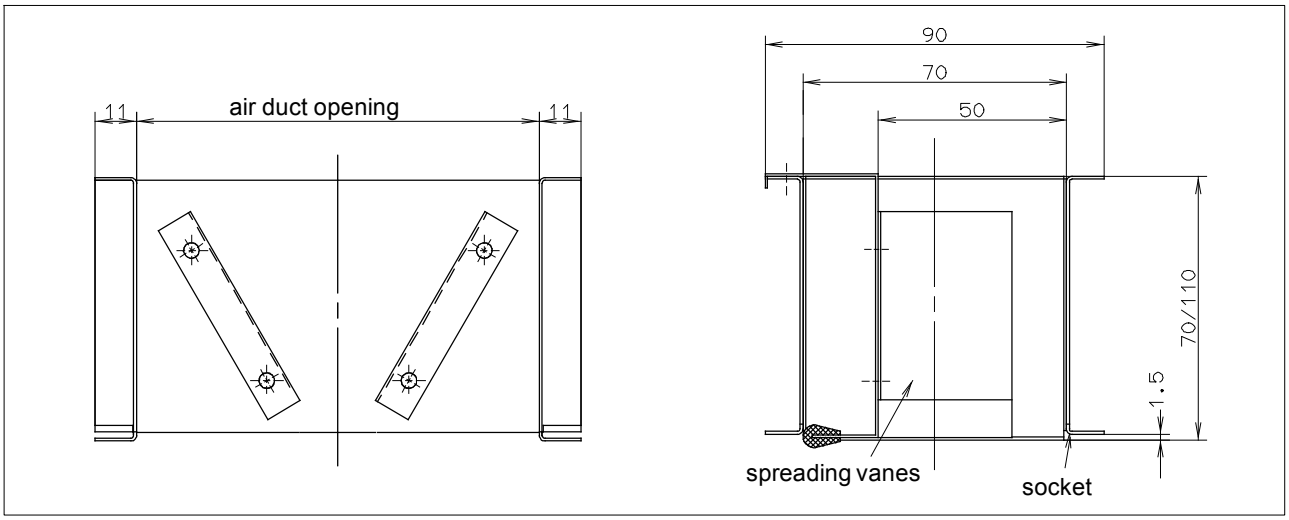

Accessories for LTG Air-water systems
Controllers

Room temperature controllers for induction units

	HKR20	HKR40	RDG100	RDG100T	RDG140	RDG160EC
24 VAC		x			x	x
230 VAC	x		x	x		
2-pipe			x	x	x	x
Change-Over			x	x	x	x
4-pipe			x	x	x	x
damper regulation		x				
valve regulation	x		x	x	x	x
therm. drives	x		x			
3-point drives			x	x		
0-10V drives				x	x	x
external sensor		x	x	x	x	x
anti-freeze protect.			x	x	x	x
electrical heating			x	x	x	x
Technical description	page 23	page 24	page 27	page 28	page 29	page 30

Room temperature controllers for fan coil units

	VKR25	RCC10	RCC30	RDG100	RDG100T	RDG140	RDG160 EC
24 VAC	x	x	x			x	x
230 VAC				x	x	x (Vent.)	
2-pipe		x		x	x	x	x
Change-Over		x		x	x	x	x
4-pipe	x		x	x	x	x	x
therm. drives	x	x	x	x	x		
3-point drives				x	x		
0-10V drives						x	x
fan level	0-I-II-III	0-I-II-III	0-I-II-III	0-I-II-III	0-I-II-III	0-I-II-III	0...10 V (EC)
man. speed	x	x	x	x	x	x	x
autom. speed				x	x	x	x
external sensor		x	x	x	x	x	x
anti-freeze protect.		x	x	x	x	x	x
electrical heating				x	x	x	x
Technical description	page 25	page 26	page 26	page 27	page 28	page 29	page 30

Accessories for LTG Air-water systems
Controllers for valve-controlled induction units types HFG, HFS and HDC

Room temperature controller type HKR 20

The temperature controller consists of an operating unit wired to the actuators by the customer.

Two straight-way valves are controlled and switched by a thermal actuator.

Functions

- The thermal actuators are switched, but not controlled, via a thermostat.
- The temperature set point adjustment ranges from +5 ... +30 °C.
- Each controller may be used to control up to 5 units.
- The controller is activated using the ON/OFF switch.

Wiring diagram

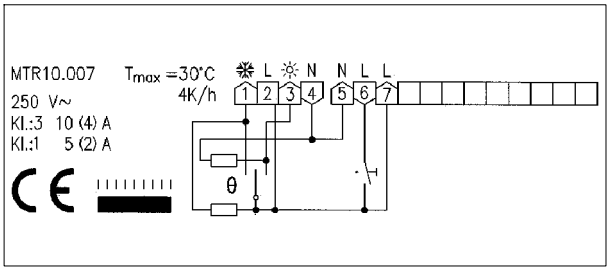

Technical data

Power supply	
Operating voltage	AC 230 V
Frequency	50/60 Hz
Degree of protection (enclosure)	
Degree of protection	IP 30 acc. EN 60529
Protection class	protective insulated
Operating environment	
Temperature range	+5 ... +30°C
X-conformity, EMV, radio interference test	
Radio interference test	meets EG-directives 82/499/EWG a. VDE 0875
Dimensions, weights, colour	
Dimensions width x height x depth	144 x 79 x 33 mm
Weight	abt. 150 g
Colour	white RAL 9010
Other tecnical data	
Switching current at AC 250 V	5 (2) A
Contact	1 changeover contact with contactless center position
Functioning temperature differential with heat recovery (RF)	with contactor load heating abt. 1.5 K ± 0.5 K cooling abt. 1.8 K ± 0.5 K
Dead zone between heating/off and cooling/off	abt. 2 K preset
Sensing element	bimetall

Accessories for LTG Air-water systems
Controllers for damper-controlled induction units types HFL and HFH

Room temperature controller type HKR 40

The HKR 40 is a continuous temperature controller with a proportional control action. It was specifically designed to fit damper-controlled LTG induction units. Its direct-action output signal is divided in a heating and a cooling sequence with a dead zone of 1 K (see function chart).
Depending on the version, the sensor may either be integrated or connected as an external sensor (e.g. located in bypass tube).
The set point X_K may be selected between +20 ... +26°C (average setting +23°C). Deviations from the set point, caused by environmental conditions or the positioning of controller or sensor, may be corrected via trimmer $X_{K+/-}$.
A maximum of 10 actuators may be connected to one controller.

Versions

HKR 40: operation with external sensor (e.g. bypass tube)
HKR 40E: with internal temperature sensor

Function chart

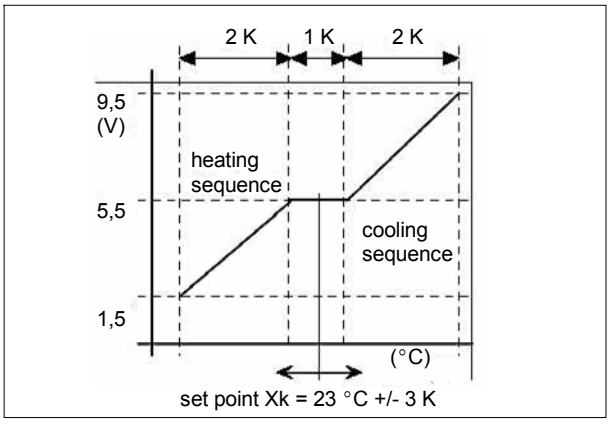

Possible settings

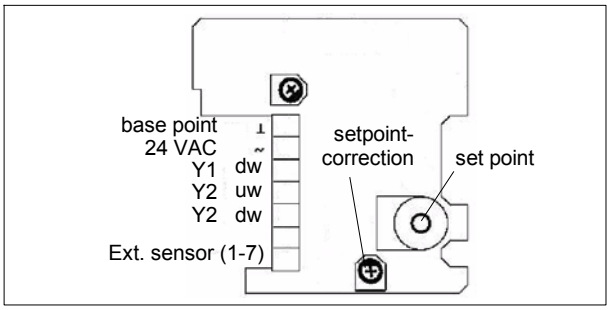

Wiring diagram

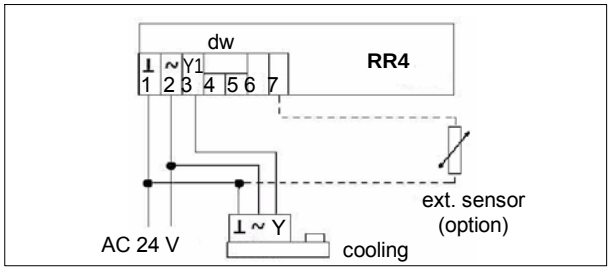

Technical data

Power supply	
Operating voltage	24 VAC +/- 15 %, 50 Hz
Frequency	50 Hz
Power input	1 VA
Outputs	
Output signal Y terminal 3	1 x 0...10 VDC (ref. potential terminal 1) (dw) incr. t_R - incr. Y heating 1.5...5.5 V / cooling 5.5...9.5 V
Output current	2 mA
Inputs	
External sensor	1
Degree of protection (enclosure)	
Degree of protection	IP 30 acc. EN 60529
Protection class	III acc. EN 81140
Operating environment	
Temperature range	service 0...+50 °C, store -10...+70 °C
Humidity	< 95% rel. humidity
X-conformity, EMV, radio interference test	
Electromagn. toler.	achieves EN 55011/03.91 (B)
Radio interfer. test	89/336/EWG-EMV
Dimensions, weight, colour	
width x height x depth	71 x 71 x 26 mm
Weight	abt. 75 g
Colour	white similar RAL 9010
Other tecnical data	
Control range	+23 °C +/- 3 K
Setpoint correction	+/- 5 K, adjustable
Proportional-band	abt. 2 K per sensor
Energy-free range	+ 1 K
Temperature sensor	KTY (2000 Ω at +25 °C)
Connection techn.	screw-type terminal 2,5 mm²
Casing	cover ABS; box PC

How to install the bypass tube

Please note that the controller or the external sensor (e.g. bypass tube) must be carefully positioned in the room to ensure that the sensor is able to capture all ambient influences. Incorrect installation may result in incorrect measuring values.
Controller, sensor and bypass tube must not be polluted.

Accessories for LTG Air-water systems
Controllers for valve-controlled fan coil units

Room temperature controller type VKR 25

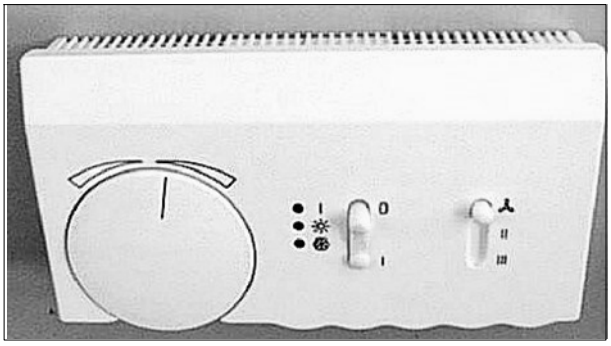

The controller is integrated in an operating unit to be wired by the customer using the unit terminals (for VKD external terminal strip, for other VF units terminal box).

Two control valves are controlled and switched by thermal actuators.

Functions

- The thermal actuators are switched, but not controlled, via a thermostat.
- The corresponding fan speed is set manually using a shift switch.
- The temperature set point adjustment ranges from +5 ... +30 °C.
- A lamp indicates whether the unit is on/off (on/off switch).
- Two LEDs indicate, whether the unit is in the cooling or heating mode.
- Each controller may be used to control up to 5 units.

Technical data

Power supply	
Operating voltage	AC 230 V
Frequency	50/60 Hz
Degree of protection (enclosure)	
Degree of protection	IP 30 acc. EN 60529
Protection class	Protective insulated
Operating environment	
Temperature range	+5 ... +30°C
X-conformity, EMV, radio interference test	
Radio interference test	Meets EG-directives 82/499/EWG a. VDE 0875
Dimensions, weight, material, colour	
Dimensions width x height x depth	144 x 79 x 32.6 mm
Weight	abt. 150 g
Casing material	Plastic
Colour of the controller	Similar to RAL 9010 (pure white) with grey lettering
Other technical data	
Switching current at AC 250 V	6 (3) A
Switching power	1,3 kW
Contact	1 changeover contact with contactless center position
Functioning temperature differential with heat recovery (RF)	With contactor load Heating abt. 1.5 K ± 0.5 K Cooling abt. 1.8 K ± 0.5 K
Dead zone between heating/off and cooling/off	abt. 1.2 K ± 0.7 K Preset
Sensing element	Bimetallic

Dimensions

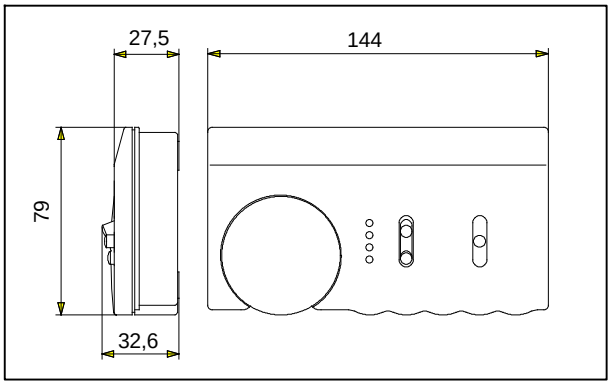

Accessories for LTG Air-water systems
Controllers for valve-controlled fan coil units

Room temperature controllers types RCC 10, RCC 30

For controlling the room temperature in individual rooms and zones being heated and cooled by fan coil units. Suitable for 2-pipe (RCC 10) or 4-pipe systems (RCC 30) with manual fan speed control.

Unit suitable for wall mounting and for control of:

- max. five three-speed fans
- a maximum of five thermal actuators (AC 230V) per output (heating / cooling).

The room temperature is measured through a sensor integrated in the unit and compared to the set point.

The controller offers three operating modes with different set points for heating or cooling, respectively. These set points may be adjusted manually on the controller by ± 6 K according to user requirements.

Operating mode	Setpoint heating	Setpoint cooling
normal	20	25
economy	16	28
anti-freeze prot.	8	-

Switching between heating and cooling mode either automatically (RCC 30) or using a changeover sensor (accessory) or manually (RCC 10). Operating mode switching via window contact, presence sensor (accessory) or mode selector switch.

Attention!
When delivered, VKR 31 is set to HEATING. If used for permanent cooling a jumperwill have to be added (see Instructions for Installation and Use

Technical data

Power supply	
Operating voltage	AC 230 V (+10 / -15 %)
Frequency	50/60 Hz
Power input	6 VA
Outputs	
Fan activation Q1, Q2, Q3	AC 230 V
Load Q1, Q2, Q3	230 VA, max. 600 VA
Control outputs Y11, Y21	AC 230 V, max. 300 VA (max. 5 thermal actuators per output)
Message input B1-GND	
Voltage to ground	return air sensor, AC 230 V
Line length	at 1.5 mm^2 copper cable max. 80 m
Control precision	± 1 K
Temperature sensor	NTC Element
Message input DU1- GND	
Changeover switch operation mode, potential-free	
Voltage to ground	SELV
Line length	at 1.5 mm^2 copper cable max. 80 m
Degree of protection (enclosure)	
Degree of protection	IP 30 acc. EN 60529
Protection class	II acc. EN 60730
Operating environment	
Climate	acc. IEC 721-3-3
Temperature range	0 ... +50 °C
Humidity	< 95 % rh
X-conformity	
Electromagn. tolerance	EN 50081-1
Low-voltage guideline	73/23/EWG, 93/68/EWG
Radio interfer. test	EN 50082-1
Dimensions, weight, colour	
Width x height x depth	97 x 115 x 43 mm
Weight	230 g
Colour	RAL 9003 white

Accessories for LTG Air-water systems
Controllers for valve-controlled induction units and fan coil units

Room temperature controller type RDG 100

For controlling the room temperature in individual rooms and zones being heated and cooled by induction units or fan coil units. Suitable for 2-pipe or 4-pipe systems with automatic or manual fan speed control.

Unit suitable for wall mounting and for control of:

- max. five three-speed fans
- a maximum of five thermal actuators (AC 230 V) per output (heating / cooling).
- or max. 5 actuators, 3-position (AC 230 V) per output (heating / cooling)
- Selection of operating mode (for induction units / for fan coil units)

Room temperature control via built-in or external sensor.

Operating voltage AC 230 V, ON/OFF, 3-position or PWM control outputs

Operating modes: Comfort, Economy and Protection
3 multifunctional inputs for keycard contact, external sensor, etc.

Automatic or manual heating / cooling changeover

Adjustable commissioning and control parameters

Minimum and maximum setpoint limitation

Backlit display

Dimensions

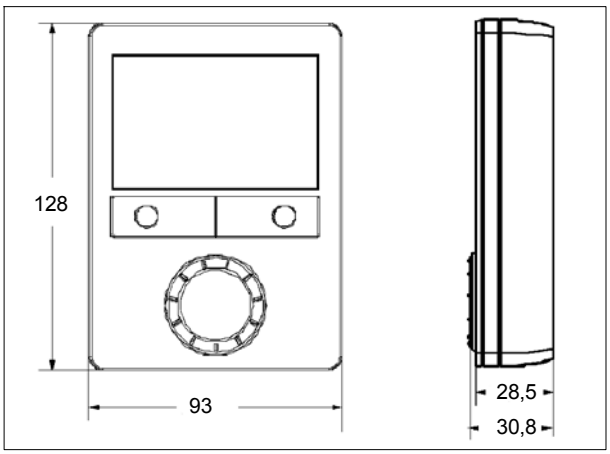

Technical data

Power supply	
Operating voltage	AC 230 V (+10/-15%)
Frequency	50/60 Hz
Power input	max. 18 VA
Outputs	
Fan activation Q1, Q2, Q3-N	AC 230 V
Load Q1, Q2, Q3-N	max. 5(4) A
Control outputs Y1, Y2, Y3, Y4-N	AC 230 V, max. 1A
Load Y1, Y2, Y3, Y4-N	max. 1 A
Multifunctional input X1-M / X2 M	
Temperature sensor	QAH11.1 (NTC)
Digital input - Operating action - Contact sensing - Insulation against mains	 Selectable (NO/NC)) DC 0...5 V, max. 5 mA N/A, mains potential !
Multifunctional input D1-GND	
Operating action Contact sensing Insulation against mains	Selectable (NO/NC) SELV DC 6...15V, 3...6 mA, 3.75 kV, reinforced insulation
Function input	
External temperature sensor, changeover sensor, operating mode switchover contact, dewpoint monitor contact, enable electrical heater contact, fault contact	Selectable
Degree of protection (housing)	
Degree of protection	IP30 acc. EN 60529
Protection class	II acc. EN 60730
Operating environment	
Climate	classif. 3K5
Temperature	0 ... +50 °C
Humidity	<95 % r.F.
X-conformity	
Electromagnetic compatibility	2004/108/EC
Low-voltage guideline	2006/95/EC
Dimensions, weight, colour	
Width x height x depth	93 x 128 x 31 mm
Weight	300 g
Colour front side housing	RAL 9003 white

Accessories for LTG Air-water systems
Controllers for valve-controlled induction units and fan coil units

Room temperature controller type RDG 100T

Gerät für Wandmontage.

For controlling the room temperature in individual rooms and zones being heated and cooled by induction units or fan coil units. Suitable for 2-pipe or 4-pipe systems with automatic or manual fan speed control.

Unit suitable for wall mounting and for control of:

- max. five three-speed fans
- a maximum of five thermal actuators (AC 230 V) per output (heating / cooling).
- or max. 5 actuators, 3-position (AC 230 V) per output (heating / cooling)
- Selection of operating mode (for induction units / for fan coil units)

Infrared remote control receiver.

Auto Timer mode with 8 programmable timers (7-day time program).

Room temperature control via built-in or external sensor

Operating voltage AC 230 V, ON/OFF, 3-position or PWM control outputs

Operating modes: Comfort, Economy and Protection
3 multifunctional inputs for keycard contact, external sensor, etc.

Automatic or manual heating / cooling changeover

Adjustable commissioning and control parameters

Minimum and maximum setpoint limitation

Backlit display

Technical data

Power supply	
Operating voltage	AC 230 V (+10/-15 %)
Frequency	50/60 Hz
Power input	max. 18 VA
Outputs	
Fan activation Q1, Q2, Q3-N	AC 230 V
Load Q1, Q2, Q3-N	max. 5(4) A
Control outputsY1, Y2, Y3, Y4-N	AC 230 V, max. 1A
Load Y1, Y2, Y3, Y4-N	Max. 1A
Multifunctional input X1-M / X2 M	
Temperature sensor	QAH11.1 (NTC)
Digital input - Operating action - Contact sensing - Insulation against mains	 Selectable (NO/NC)) DC 0...5 V, max. 5 mA N/A, mains potential !
Multifunctional input D1-GND	
Operating action Contact sensing Insulation against mains	Selectable (NO/NC) SELV DC 6...15V, 3...6 mA, 3.75 kV, reinforced insulation
Function input	
External temperature sensor, changeover sensor, operating mode switchover contact, dewpoint monitor contact, enable electrical heater contact, fault contact	Selectable
Degree of protection (housing)	
Degree of protection	IP30 acc. EN 60529
Protection class	II acc. EN 60730
Operating environment	
Climate	classif. 3K5
Temperature	0 ... +50 °C
Humidity	<95 % rh
X-conformity	
Electromagnetic compatibility	2004/108/EC
Low-voltage guideline	2006/95/EC
Dimensions, weight, colour	
Width x height x depth	93 x 128 x 31 mm
Weight	300 g
Colour front side housing	RAL 9003 white

Accessories for LTG Air-water systems
Controllers for valve-controlled induction units and fan coil units

Room temperature controller type RDG 140

For controlling the room temperature in individual rooms and zones being heated and cooled by induction units or fan coil units. Suitable for 2-pipe or 4-pipe systems with automatic or manual fan speed control.

Unit suitable for wall mounting and for control of:

- max. five three-speed fans
- a maximum of five thermal actuators = 0...10 V (AC 24 V) per output (heating / cooling).
- Selection of operating mode (for induction units / for fan coil units)

Room temperature control via built-in or external sensor.

Operating voltage AC 24 V, ON/OFF, DC 0 … 10 V control outputs

Operating modes: Comfort, Economy and Protection
3 multifunctional inputs for keycard contact, external sensor, etc.

Automatic or manual heating / cooling changeover

Adjustable commissioning and control parameters

Minimum and maximum setpoint limitation

Backlit display

technicalz data

Power supply	
Operating voltage	AC 230 V (fan activation) AC 24 V (controller and valve actuator)
Frequency	50/60 Hz
Power input	max. 2 VA
Outputs	
Fan control Q1, Q2, Q3-N	AC 230 V
Load Q1, Q2, Q3-N	max. 5 A
Valve actuator Y10-G0 / Y20-G0	SELV DC 0-10V
Load Y10-G0 / Y20-G0	max. ± 1 A
Multifunctional input X1-M / X2 M	
Temperature sensor	QAH11.1 (NTC)
Digital input - Operating action - Contact sensing - Insulation against mains	 Selectable (NO/NC)) DC 0...5 V, max. 5 mA N/A, mains potential !
Multifunctional input D1-GND	
Operating action Contact sensing Insulation against mains	Selectable (NO/NC) SELV DC 6...15V, 3...6 mA, 3.75 kV, reinforced insulation
Function input	
External temperature sensor, changeover sensor, operating mode switchover contact, dewpoint monitor contact, enable electrical heater contact, fault contact	Selectable
Degree of protection (housing)	
Degree of protection	IP30 acc. EN 60529
Protection class	II acc. EN 60730
Operating environment	
Climate	classif. 3K5
Temperature	0 ... +50 °C
Humidity	<95 % rh
X-conformity	
Electromagnetic compatibility	2004/108/EC
Low-voltage guideline	2006/95/EC
Dimensions, weight, colour	
Width x height x depth	93 x 128 x 31 mm
Weight	300 g
Colour front side housing	RAL 9003 white

Accessories for LTG Air-water systems
Controllers for valve-controlled induction units andfan coil units

Room temperature controller type RDG 160 EC

For controlling the room temperature in individual rooms and zones being heated and cooled by induction units or fan coil units. Suitable for 2-pipe or 4-pipe systems with automatic or manual fan speed control.

Unit suitable for wall mounting and for control of:

- max. five three-speed fans
- a maximum of five actuators 0 ... 10 V (AC 24 V) per output (heating/cooling) in the induction-unit-mode
- or max. 5 actuators, 3-position (AC 230 V) per output (heating / cooling)
- Selection of operating mode (for induction units / for fan coil units)

Room temperature control via built-in or external sensor.

Operating voltage AC 230 V / 24 AC V, ON/OFF, 0 ... 10 V control outputs

Operating modes: Comfort, Economy and Protection
3 multifunctional inputs for keycard contact, external sensor, etc.

Automatic or manual heating / cooling changeover

Adjustable commissioning and control parameters

Minimum and maximum setpoint limitation

Backlit display

Technical data

Power supply	
Operating voltage	SELV DC 0 ... 10 V
Frequency	50/60 Hz
Power input	max. 2 VA
Outputs	
Fan activation Y50-G0	AC 24 V
Load Y50-G0	max. 5 A
Control outputs Y10-G0 / Y20-G0	max. ± 1 mA
Multifunctional input X1-M / X2 M	
Temperature sensor	QAH11.1 (NTC)
Digital input - Operating action - Contact sensing - Insulation against mains	 Selectable (NO/NC)) DC 0...5 V, max. 5 mA N/A, mains potential !
Multifunctional input D1-GND	
Operating action Contact sensing Insulation against mains	Selectable (NO/NC) SELV DC 6...15V, 3...6 mA, 3.75 kV, reinforced insulation
Function input	
External temperature sensor, changeover sensor, operating mode switchover contact, dewpoint monitor contact, enable electrical heater contact, fault contact	Selectable
Degree of protection (enclosure)	
Degree of protection	IP30 acc. EN 60529
Protection class	II acc. EN 60730
Operating environment	
Climate	classif. 3K5
Temperature	0 ... +50 °C
Humidity	<95 % rh
X-conformity	
Electromagn. tolerance	2004/108/EC
Low-voltage guideline	2006/95/EC
Dimensions, weight, colour	
Width x height x depth	93 x 128 x 31 mm
Weight	250 g
Colour front side housing	RAL 9003 white

Accessories for LTG Air-water systems
Radiator valves

Radiator valve VDN115 (straigt-way valve)

- Valve bodies made of brass, mat nickel-plated
- DN 15
- Integrated presetting of the k_v-values (0.10 .. .0.89 m³/h)
- PN 10, cold and warm water, 1 ... +120°C
- Manual knob / protective cover included in the delivery
- Can be combined with
  with electromotoric actuators SSA31, SSA61, SSA81 or with thermostatic actuators STA21, STA71,AA4004 resp. with 0...10 V actuators STS61, AA500
- Nominal stroke min. 1.2 mm

Radiator valve VEN115 (angle valve)

- Valve bodies made of brass, mat nickel-plated
- DN 15
- Integrated presetting of the k_v-values (0.10 ... 0.89 m³/h)
- PN 10, cold and warm water, 1 ... +120 °C
- Manual knob / protective cover included in the delivery
- Can be combined with
  with electromotoric actuators SSA31, SSA61, SSA81 or with thermostatic actuators STA21, STA71,AA4004 resp. with 0...10 V actuators STS61, AA500
- Nominal stroke min. 1.2 mm

Radiator valve VUN215 (reverse angle valve)

- Valve bodies made of brass, mat nickel-plated
- DN 15
- Integrated presetting of the k_v-values (0.10 ... 0.89 m³/h)
- PN 10, cold and warm water, 1 ... +120 °C
- Manual knob / protective cover included in the delivery
- Can be combined with
  with electromotoric actuators SSA31, SSA61, SSA81 or with thermostatic actuators STA21, STA71,AA4004 resp. with 0...10 V actuators STS61, AA500
- Nominal stroke min. 1.2 mm

Accessories for LTG Air-water systems
Valve actuators

Thermal valve actuator 2-point, AA2004 and AA4004

- Voltage AC 230 V (AA2004) or AC 24 V (AA4004)
- Normally closed
- PWM (pulse-width modulation)
- Actuating force 100 N
- Degree of protection IP54
- Up-side down installation possible
- Position indication
- Maintenance free
- Snap-on installation on adaptor
- Anti-theft protection

Thermoelectronic valve actuator 0 ... 10V, AA5004

- Voltage AC 24 V
- Normally close
- PWM (pulse-width modulation)
- Actuating force 100 N
- Degree of protection IP54
- Up-side down installation possible
- Position indication
- Maintenance free
- Snap-on installation on adaptor
- Anti-theft protection

Electrothermal valve actuator 2-point, STA21 and STA71 (PWM)

- Operating voltage AC 230 V (STA21) or AC 24 V (STA71)
- Normally closed
- PWM (pulse width modulation) STA71
- Actuating force 105 N
- Degree of protection IP41
- Position indication
- Maintenance free
- Direct mounting with coupling nut

Electromotoric valve actuator 3-position, SSA31 and SSA81

- Operating voltage AC 230 V (SSA31) or AC 24 V (SSA81)
- Automatic identification of valve stroke
- Actuatingl force 100 N
- Degree of protection IP40
- Manual override and position indication
- Maintenance free
- Direct mounting with coupling nut

Electromotoric valve actuator 0 ... 10 V, SSA61

- Operating voltage AC 24 V
- Automatic identification of valve stroke
- Nominal force 100 N
- Housing protection IP40
- Manual override and position indication
- Maintenance free
- Direct mounting with coupling nut

Thermomotoric valve actuator 0 ... 10 V, STS61

- Operating voltage AC 24 V
- Automatic identification of valve stroke
- Nominal force 105 N
- Housing protection IP42
- Position indication
- Maintenance free
- Direct mounting with coupling nut

Accessories for LTG Air-water systems
Casings for perimeter installation

Casing with plane front

Casing with raised side mullions (front with visible joint)

Versions

- With plane front
- With raised side mullions (front with visible joint)

Scope of supply

4-side or 5-side casing for HF and VF units, of galvanized 1.5 mm or 1 mm sheet metal.

Consisting of

- Supporting structure of channel-sections
- Rear cover panel
- Angle panel
- Side mullions
- Air outlet grille LDC (aluminium)

All exposed surfaces are high-quality powder coated in colours similar to RAL, thickness of layer 60 µm.

All VF units are fixed to the casing using brackets.

All HF units are fixed using rear wall fixtures.

Dimensions

Casing dimensions of the individual units see page 36.
Special lengths on request.
Special conditions apply to unit types QHG and QVC (see chart page 36).

Accessories for LTG Air-water systems
Casings for perimeter installation

Casing with plane front (no joint between sides and front panel)

4 sides, powder coated, colours similar to RAL, for all VF and HF units and sizes (except VKD and VKH)

All parts are easy to install and remove without special tools.

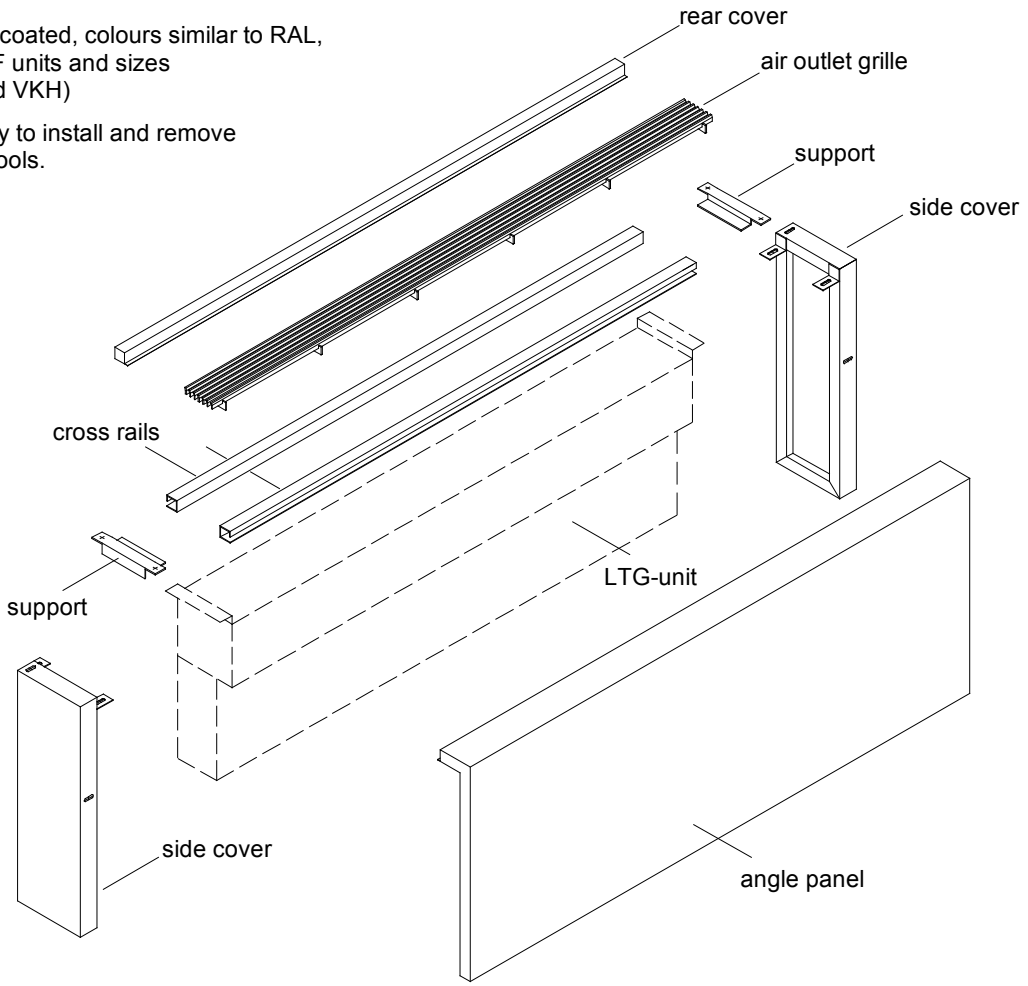

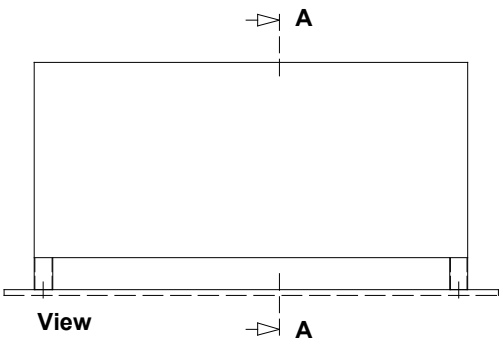

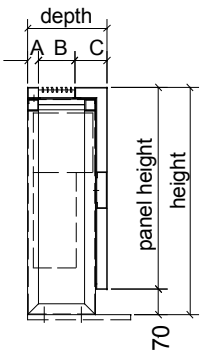

Section A-A

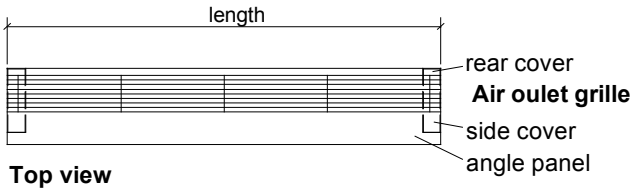

Top view

Accessories for LTG Air-water systems
Casings for perimeter installation

Casing with raised side mullions (visible joint between front panel and sides)

4 sides, powder coated, colours similar to RAL, for all VF and HF units and sizes (except VKD and VKH)

All parts are easy to install and remove without special tools.

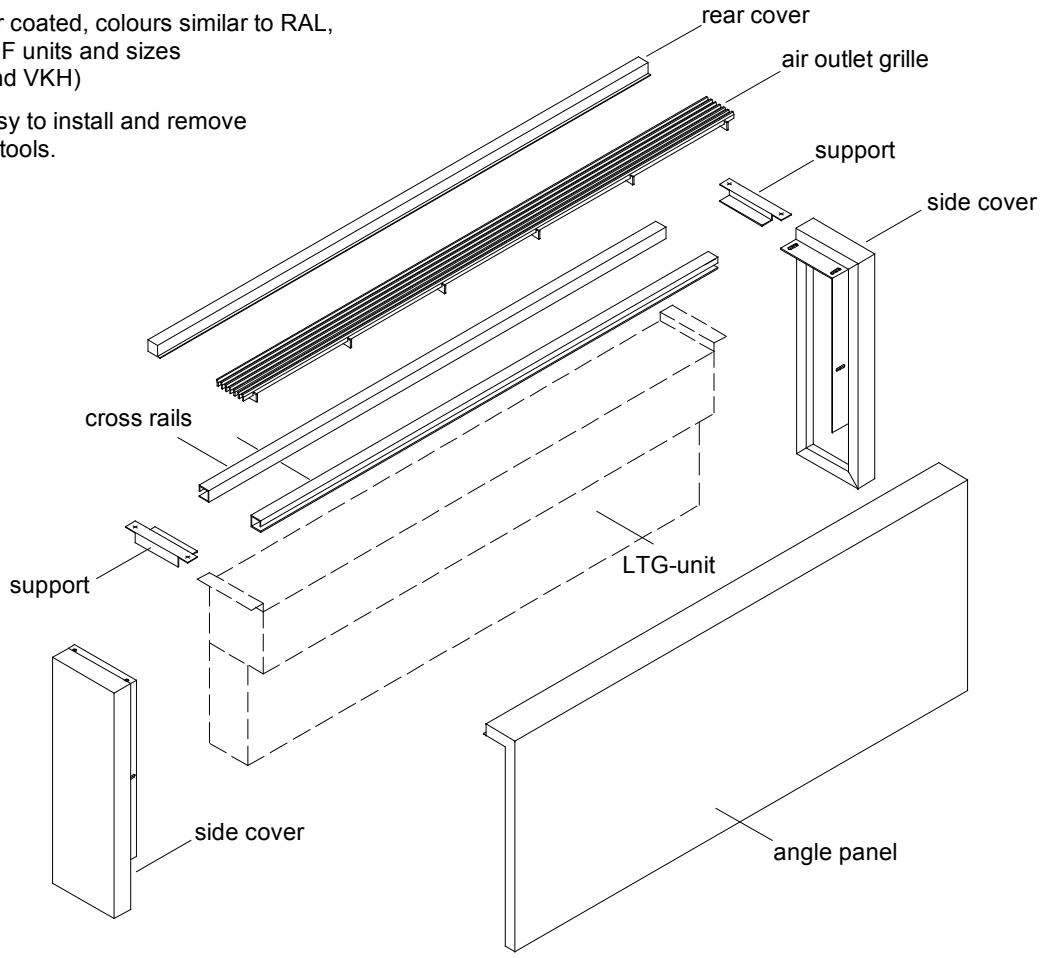

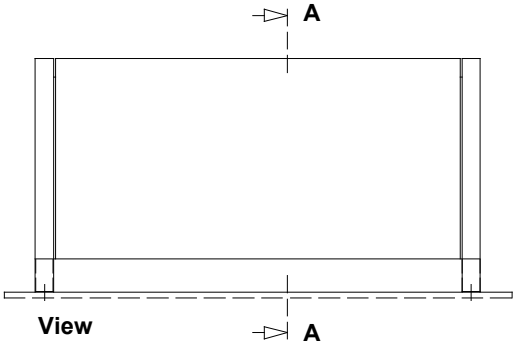

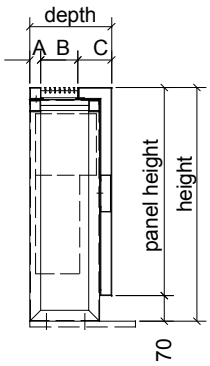

Section A-A

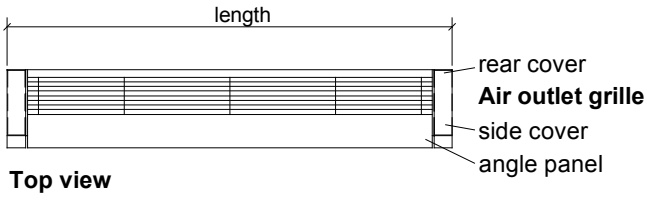

Top view

Accessories for LTG Air-water systems
Casings for perimeter installation

Dimensions (dimensional drawings see previous pages)

Unit Type	Size	Casing height [mm]	Length [mm]	Total depth [mm]	A [mm]	B [mm]	C [mm]
VFC	500 630 800 1000 1250	630	1050 1200 1400 1600 1800	220	30	100	90
HFG with bypass	500 630 800 1000 1250	800	1050 1200 1400 1600 1800	285	30	100	155
HFG-0	500 630 800 1000 1250	800	1050 1200 1400 1600 1800	285	30	100	155
HFL	500 630 800 1000 1250	800	1050 1200 1400 1600 1800	350	50	130	170
HFH	500 630 800 1000 1250	800	1050 1200 1400 1600 1800	350	50	130	170
QHG	500 630 800 1000 1250	750		300	30	100	170
QVC	500 630 800 1000 1250	850					
QVC/QHG: please note for all sizes that width of casing = width of outlet + 120 mm							

Specification and schedule of prices
Room temperature controller type HKR 20

Quantity	Description of services	Unit price in €	Total price in €
	Room thermostat for 1 … 5 induction units **for wall mounting and wiring on site.** Supply voltage AC 230 V/ 50 Hz, switching current 6 A, with contactless centre position, temperature range +5 … +30 °C. One main switch ON/OFF. Plastic housing, alpine white RAL 9010, IP 30. Dimensions: 144 x 79 x 33 mm. **Manufacturer: LTG Aktiengesellschaft** **Series: Room temperature controllers for induction units** **Type: HKR 20**		

Specification and schedule of prices
Room temperature controller type HKR 40

Quantity	Description of services	Unit price in €	Total price in €
	Control unit for induction units Klimavent® to individually control the room air temperature in ventilation and A/C plants. The control unit is characterized by proportional action with preset proportional bands. It compares the actual value with the set-point and, in case of discrepancies, creates a proportional continuous control signal. The temperature sensor is integrated in a bypass tube mounted to the induction unit, including approx. 2 m cable, enabling the operating unit to be installed independently, e.g. to the sill. The control unit may be used to activate continuous damper actuators of LTG four-pipe induction units (for cooling and heating). The control unit is provided with a button to change the temperature set-point of +23 °C by ± 3 K to individual requirement. Internally, the +23 °C set-point may again be adjusted by ± 5 K. Colour of the control unit : similar to RAL 9010. Dimensions : 71 x 71 x 26 mm. Degree of protection : IP 20 **Manufacturer: LTG Aktiengesellschaft** **Series: Room temperature controller for induction units** **Type: HKR 40**		

Specification and schedule of prices
Room temperature controller type VKR 25

Quantity	Description of services	Unit price in €	Total price in €
	Room thermostat for 1… 5 fan coil units type VFC, QVC, LVC, VKD, for wall mounting on site and wiring to a terminal strip on the fan coil unit's outside (VKD, IP 20) or to a terminal box (QVC, LVC, VKD, IP 45). Supply voltage AC 230 V / 50 Hz, switching current 6 A, with contactless center position, temperature range +10 … +30 °C. One switch for the fan speeds high / medium / low for individual adjustment by the user. One main switch with control lamp. LEDs for heating and cooling. Plastic housing, similar to RAL 9010, IP 30. Dimensions : 144 x 79 x 33 mm. **Manufacturer: LTG Aktiengesellschaft** **Series: Room temperature controllers for fan coil units** **Type: VKR 25**		

Specification and schedule of prices
Room temperature controller type RCC10, RCC30

Quantity	Description of services	Unit price in €	Total price in €
	Controller for fan coil units VFC, QVC, LVC, VKD and VKB, wall mounted. Controller with integrated sensor with 2 Triac outputs to trigger a maximum of 5 thermal actuators AC 230 V per output as well as 3 Triac outputs to manually trigger the fan speed. The actuators are triggered via pulse-width modulation. - Potential-free contact for window contact or presence detector - Sensor input for return air or changeover sensor (RCC10). Supply voltage AC 230 V / 50 Hz, power input 6 VA max. <u>Operating modes</u> - Comfort: Set-point heating +20 °C, cooling +25 °C - Economy: Set-point heating +16 °C, cooling +28 °C - Standby: Set-point heating +8 °C <u>Operating level</u> - Set-point adjuster (correction ± 6 K) - Mode selector switch - Manual setting of three speeds - LED display of the operating modes and the fan mode. <u>Control characteristics</u> o Cooling only: two-pipe unit with 5 actuators RCC10 max. o Cooling and heating: four-pipe unit with 5 actuators RCC30 max. each o Changeover: two-pipe unit as changeover RCC10 Colour of the operating unit: similar to RAL 9003 Dimensions: 97 x 115 x 43 mm Protection: IP 30 **Manufacturer: LTG Aktiengesellschaft** **Series: Room temperature controllers for fan coil units** **Type: RCC10, RCC30**		

Specification and schedule of prices
Room temperature controller type RDG 100

Quantity	Description of services	Unit price in €	Total price in €
	Electronic room temperature controller, AC 230 V, for induction unit applications, fan coil unit applications and universal applications. **Characteristics** - 3 outputs: ON/OFF, 3-position or PWM - Adjustable room temperature setpoints - Temperature control depending on the room temperature (via built-in sensor) or via external room/return air temperature sensor - Automatic or manual heating/cooling changeover - Operating mode button - Display in °C and/or °F - Button lock (automatic or manual) - 3 multifunctional inputs - Floor heating temperature limitation - Reset to factory settings - Backlit LCD display **Technical data** - Operating voltage: AC 230 V, 50/60 Hz - Setpoint range: +5 ... +40 °C - Fan control rating: AC 230 V, max. 5 (4) A - Control outputs heating/cooling valve actuator: AC 230 V, max. 1 A - Degree of protection of housing: IP30 acc. to EN 60529 - Colour of housing: white, RAL 9003 **Manufacturer:** **LTG Aktiengesellschaft** **Series:** **Room temperature controllers** **Type:** **RDG 100**		

Specification and schedule of prices
Room temperature controller type RDG 100T

Quantity	Description of services	Unit price in €	Total price in €
	Electronic room temperature controller, AC 230 V, for induction unit and fan coil unit applications, 7-day time program. **Characteristics** - 3 outputs: ON/OFF, 3-position or PWM - Adjustable room temperature setpoints - Temperature control depending on the room temperature (via built-in sensor) or via external room/return air temperature sensor - Automatic or manual heating/cooling changeover - Operating mode button - Display in °C and/or °F - Button lock (automatic or manual) - 3 multifunctional inputs - Floor heating temperature limitation - Reset to factory settings - Backlit LCD display - 7-day time program with 8 programmable timers - Infrared remote control **Technical data** - Operating voltage: AC 230 V, 50/60 Hz - Setpoint range: +5 ... +40 °C - Fan control rating: AC 230 V, max. 5 (4) A - Control outputs heating/cooling valve actuator: AC 230 V, max. 1 A - Degree of protection of housing: IP 30 acc. to EN 60529 - Colour of housing: white, RAL 9003 **Manufacturer:** **LTG Aktiengesellschaft** **Series:** **Room temperature controllers** **Type:** **RDG 100T**		

Specification and schedule of prices
Room temperature controller type RDG 140

Quantity	Description of services	Unit price in €	Total price in €
	Electronic room temperature controller, AC 24 V, for induction unit and fan coil unit applications, DC 0 … 10 V **Characteristics** - 2 outputs DC 0 … 10 V heating and cooling (valve actuators) - Adjustable room temperature setpoints - Temperature control depending on the room temperature (via built-in sensor) or via external room/return air temperature sensor - Automatic or manual heating/cooling changeover - Operating mode button - Display in °C and/or °F - Button lock (automatic or manual) - 3 multifunctional inputs - Floor heating temperature limitation - Reset to factory settings - Backlit LCD display **Technical data** - Operating voltage: AC 24 V, 50/60 Hz - Setpoint range: +5 ... +40 °C - Fan control rating: AC 230 V, max. 5 (4) A - Control outputs heating/cooling valve actuator: DC 0 … 10 V, max. ± 1 mA - Degree of protection of housing: IP 30 acc. to EN 60529 - Colour of housing: white, RAL 9003 **Manufacturer:** **LTG Aktiengesellschaft** **Series:** **Room temperature controllers** **Type:** **RDG 140**		

Specification and schedule of prices
Room temperature controller type RDG 160 EC

Quantity	Description of services	Unit price in €	Total price in €
	Electronic room temperature controller, AC 24 V, **for induction unit and fan coil unit applications, ECM fan.** **Characteristics** - 2 outputs DC 0 … 10 V and fan control - Adjustable room temperature setpoints - Temperature control depending on the room temperature (via built-in sensor) or via external room/return air temperature sensor - Automatic or manual heating/cooling changeover - Operating mode button - Display in °C and/or °F - Button lock (automatic or manual) - 3 multifunctional inputs - Floor heating temperature limitation - Reset to factory settings - Backlit LCD display - ECM fan **Technical data** - Operating voltage: AC 24 V, 50/60 Hz - Setpoint range: +5 ... +40 °C - Fan control rating: DC 0 ... 10 V, max. 1 mA - Control outputs heating/cooling valve actuator: DC 0 … 10 V, max. ± 1 mA - Degree of protection of housing: IP 30 acc. to EN 60529 - Colour of housing: white, RAL 9003 **Accessories** IRA211 infrared remote control for room thermostat RDG1..T **Manufacturer:** **LTG Aktiengesellschaft** **Series:** **Room temperature controllers** **Type:** **RDG 160EC**		

Locations and Representatives

Germany

Office East 2
Sales area: **postcode 01 - 09, 98 - 99**
Johannes-Ebert-Straße 20 · D-09128 Chemnitz
Herr Schenfeld ☎ +49 371 77118-01, Fax -02
E-mail: Schenfeld@LTG-AG.de

Office East 1
Sales area: **postcode 10 - 25, 39**
Eisenhutweg 51a · D-12487 Berlin
Herr Linke ☎ +49 30 632287-74, Fax -75
E-mail: Linke@LTG-AG.de

Office North
Sales area: **postcode 20 - 31, 38**
An den Auewiesen 24 · D-31515 Wunstorf
Herr Krocker ☎ +49 5031 5150234, Fax 9623334
E-Mail: Krocker@LTG-AG.de

Office West
Sales area: **postcode 32 - 33, 40 - 53, 58 - 59**
Baststraße 30 · D-46119 Oberhausen/Rheinl.
Herr Perenz ☎ +49 208 30431-55, Fax -56
E-mail: Perenz@LTG-AG.de

Central Office 2
Sales area: **postcode 34 - 37, 56 - 57, 61 - 62, 65**
Sperberweg 16 · D-35745 Herborn
Herr Hartmann ☎ +49 2772 570-725, Fax -727
E-mail: M.Hartmann@LTG-AG.de

Central Office 1
Sales area: **postcode 54 - 55, 60, 63 - 64, 66 - 69, 97**
Wingertstraße 3a · 64390 Erzhausen
Herr Lohr · Tel. +49 6150 542-1868, Fax -1892
Lohr@LTG-AG.de

Office Southwest
Sales area: **postcode 70 - 79, 88 - 89**
Grenzstraße 7 · D-70435 Stuttgart
Frau Schanbacher · Tel. +49 711 8201-181, Fax -210
E-Mail: Schanbacher@LTG-AG.de

Office South
Sales area: **postcode 80 - 87, 90 - 96**
Grenzstraße 7 · D-70435 Stuttgart
Frau Schanbacher · Tel. +49 711 8201-181, Fax -210
E-Mail: Schanbacher@LTG-AG.de

Austria

KTG Klimatechnische Gesellschaft mbH
Schubertstraße 13 · A-2126 Ladendorf
☎ +43 2575 210-89, Fax -22 · E-Mail: office@ktg-wien.com

Great Britain

MAP Motorised Air Products Ltd.
Unit 5A · Sopwith Crescent
Wickford Business Park · Wickford · GB-Essex SS11 8YU
☎ +44 1268 5744-42, Fax -43 · E-Mail: info@mapuk.com

Netherlands

Opticlima Systems b.v.
Leeuwerikstraat 110 · NL-3853 AG Ermelo
☎ +31 341 4939-69, Fax -31 · E-Mail: info@opticlima.nl

Poland

HTK Went Sp.z.o.o.
ul. Chopina 13/3 · PL-30047 Krakow
☎ +48 12 632-3132, Fax -8193 · E-Mail: info@htk-went.pl

Portugal

ArGelo S. A.
R. Luis Pastor de Macedo · Lote 28 B, P-1750-158 Lisboa
☎ +351 21 75201-20, Fax -29 · E-Mail: info@argelo.pt

Switzerland

Laminair AG
Kirchbergstrasse 105 · CH-3400 Burgdorf
☎ +41 34 42002-10, Fax -11 · E-Mail: info@laminair.ch

Turkey

Step Müh. Yapi Ltd.
Barbaros Mah. · Kayacan Sokak No. 10
TR-34746 Yenisahra-Atasehir-Istanbul
☎ +90 216 4700-070, Fax -525 · E-Mail:
info@stepyapi.com.tr

The Program for Comfort Air Technology

Key components
Air diffusers for ceilings, walls and floors: LTG System clean®, linear diffusers, displacement air diffusers, swirl diffusers Coandavent® · LTG chilled beam cool wave® · Induction units Klimavent® · Induction unit Coandatrol® · Fan coil units Raumluft · Ceiling fan coil units Ventotel® · Decentralized facade ventilation units Univent® · Airflow control units · labair® system: components for lab ventilation

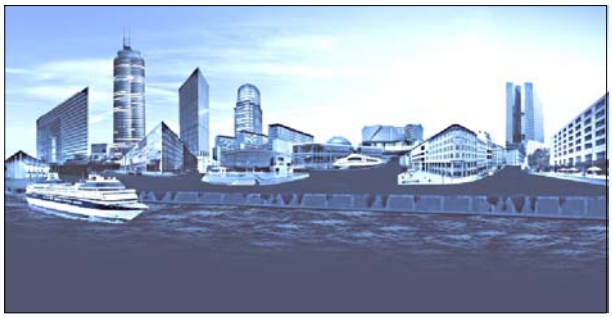

LTG Engineering Services
Technical services for investors, architects, engineers and plant builders during design, construction and operation of buildings. Reliable and precise data relating to the ventilation of air conditioning system are given already before realization of the project, determined by measurements, calculations, building simulations and experiments.

The Program for Process Air Technology

Key components
Axial, radial and tangential fans · Fahrtwind Simulators · LTG Filtration Technology: fans, suction nozzles, dampers, filters, separators, compactors · LTG Humidification Technology: air humidifiers, product humidifiers

LTG Engineering Services
Technical services during development and operation of assembly groups, machines and plants · Analysis, simulation, optimization · Customized solutions · Mobile filtration lab/ filter engineering on site